SAMWON TECH

NOVA Series

SP590/580/570/540

Instruction Manual

PROGRAMMABLE CONTROLLER

Contents

1. Safety Guide ---- 3
2. Control Keys and Display ---- 5
3. Parameter Map ---- 6
4. Flow of Operating Display ---- 8
5. Setting Up Parameter in each Group ---- 9
5.1 Input Group(G.IN) ---- 9
5.2 Output Group(G.OUT) ---- 13
5.3 Control Group(G.CTL) ---- 16
5.4 Program Group(G.PROG) ---- 18
5.5 Digital Output Group(G.DO) ---- 24
5.6 Inner Signal Group(G.IS) ---- 25
5.7 PID Group(G.PID) ---- 27
5.8 Auto Tunning Group(G.AT) ---- 29
5.9 Alarm Group(G.ALM) ---- 31
5.10 Retransmission Group(G.RET) ---- 34
5.11 Communication Group(G.COM) ---- 35
6. Display Error and Correction ---- 37
7. Installation ---- 38
7.1 Dimension and Panel Cutout ---- 38
7.2 How to install Mount ---- 42
7.3 Power Cable Specification ---- 43
7.4 Terminal Specification ---- 43
7.5 Terminal Arrangement and External Wiring ---- 44

7.6 Grounding and Power Cable Connection ---- 48
7.7 Analog Input Connection ---- 48
7.8 Analog Output Connection ---- 49
7.9 External Contact Output Connection(RELAY) ---- 50
7.10 External Contact Input Connection(DI) ---- 50
7.11 Use an Auxiliary Relay ---- 50
7.12 Communication Wiring(RS485) ---- 51

Attach. Table of D-Register ---- 52

Table 1 : Type of Input Sensor ---- 9
Table 2 : DI Operation ---- 16
Table 3 : Link Code ---- 21
Table 4 : DO Setting Type ---- 24
Table 5 : Type of Alarm ---- 32

Fig 1 : Example of Piece Bias ---- 11
Fig 2 : Example of Piece Bias Formula ---- 11
Fig 3 : Example of Control Output (CT = 10 sec) ---- 14
Fig 4 : SSP START ---- 18
Fig 5 : Wait Function-Wait Function Release Within Waiting Time ---- 20
Fig 6 : Wait Function /PV input data can't enter the wait zone ---- 21
Fig 7 : Example of Inner Signal Zone ---- 25
Fig 8 : Overshoot Suppressing by Fuzzy Function ---- 27
Fig 9 : AUTO TUNING ---- 29
Fig 10 : AT GAIN ---- 30
Fig 11 : Alarm Operation ---- 32

1. Safety Guide

The following safety symbols are used in this manual

(A) If this symbol is marked on the product, the operator must investigate the explanation given in this manual to protect injury or death to personnel or damage to instrument.

(1) For Production : it should be marked when operator must refer the explanation in the manual to avoid loss of life or damage to instrument.

(2) For Instruction Manual : it marks to avoid operator's loss of life and injury that may result comes from Electric Shock.

(B) Functional earth terminal

Equipment protected by double or reinforced insulation

It marks the terminal must be connected to Ground prior to operating the equipment.

(C) It marks additional Information on the operation and features of the product.

(D) It marks for further information on the current topic and pages

Precautions on this instruction Manual

(1) This Manual should be passed on the end User and keep a suitable place for operator to study and check the function of the product.
(2) Operator should carefully study, understand how to operate this product before
(3) This manual is describing the functions of the product. We, Samwontech, does not warrant that the functions will suit a particular purpose.
(4) Under absolutely no circumstance may the contents of this manual in part or in whole be transcribed or copied without permission.
(5) All contents of this manual has been made to ensure accuracy in the preparation, However, should any errors or omissions come to the attention of the user, feel free to contact our sales representatives or our sales office

Regarding Safety and Unauthorized Modification

(1) In order to protect this product and the system controlled by it against damage and ensure its safe use, make certain that all of the safety instructions and precautions in this manual are strictly adhered to.
(2) We, Samwontech, are not guarantee safety if the products are not handled according to this instruction manuals
(3) If separate protection or safety circuits are to be installed for this product or the system which is controlled by this product, ensure that such circuits are installed external to the product.
(4) Don't try to make modifications or additions internal to the product. It may becomes electric shock, burn or out of order.
(5) In case of replacement parts or consumables of the product, must call to our sales office.
(6) Protect this product from moisture. It may becomes out of order.
(7) Protect any kind of shock and vibration to the product. It may becomes product defects and out of order

Regarding an exemption from responsibility

(1) Samwontech co. Ltd does not make any warranties regarding the product except Warranty conditions those mentioned in this manual.
(2) We assumes no liability to any party for any loss or damage, direct or indirect, caused by the use or any unpredictable defect of the product.

CAUTION

Regarding the production Quality Assurance.

(1) The guaranteed period of the production quality assurance is (1) one year after end user buy it and it will be free to fix defected product under regular usage described by this manual.
(2) It will be charged to fix defected product after warranty period. This charge will announced by our actual cost to be calculated during the fixing time.
(3) It will be charging even if within warranty period as following events.
  (3.1) Defect by operator and user's default.(forget password, production initialize)
  (3.2) Natural disaster.(fire, water flow etc)
  (3.3) Additional shift after 1st installed.
  (3.4) Improperly repaired, or altered, modified in anyway.
  (3.5) Power failure in unstable power condition.
(4) Feel free to contact our sales office whenever it need to make A/S.

CAUTION

Environmental precautions for installation.

(1) Be sure to operate the controller installed on a panel to prevent electric shock.
(2) To install the controller, do select a location where;
- ■ No one may accidentally touch terminal.
- ■ Mechanical vibrations are minimal.
- ■ No corrosive gas is prevent.
- ■ Temperature fluctuation is minimal.
- ■ Temperature can be maintained. (50 ℃ below / 10 ℃ over)
- ■ No direct heat radiation is present.
- ■ No magnetic disturbances are caused
- ■ No water is splashed.
- ■ No flammable materials are around.
- ■ No wind blows. (prevent Dust with salt)
- ■ No ultraviolet rays are present.
- ■ Pollution Degree 2
- ■ Installation Category II
- ■ Do not block openings
- ■ If the equipment is used in a manner not specified by the manufacturer, the protection provided by the equipment may be impaired.
- ■ A switch or circuit-breaker acting as the disconnect device shall be included in the application or the building installation

CAUTION

Precautions of Controller Mounting.

- ■ Keep the input circuit wiring as far as possible away from power and ground circuit.
- ■ Keep the controllers in 10℃ ~ 50℃/ 20 % ~ 90 % RH, Warming up needed to use controller when temperature is below 10℃ in advance.
- ■ Do not mount front panel facing downward.
- ■ To prevent electric shock, be sure to turn off and the source circuit breaker before wiring.
- ■ The power consumptions are 100-240VAC, 50/60Hz, 10VAmax and operate without power switching in advance.
- ■ No work in wet hands (it caused electric shock)
- ■ Follow operation by precaution in the manual to avoid fire, electric shock, loss of life etc.
- ■ Requested to follow mounting and operation methods just indicated in this manual.
- ■ Refer the way of grounding connection, however, keep away for grounding to Gas pipe, water pipe, lightening rod etc.
- ■ Be sure not to power connection before finishing of wiring between each contact point.
- ■ Not close and wrapping the heat hole in back case of controller.

2. Control Keys and Display

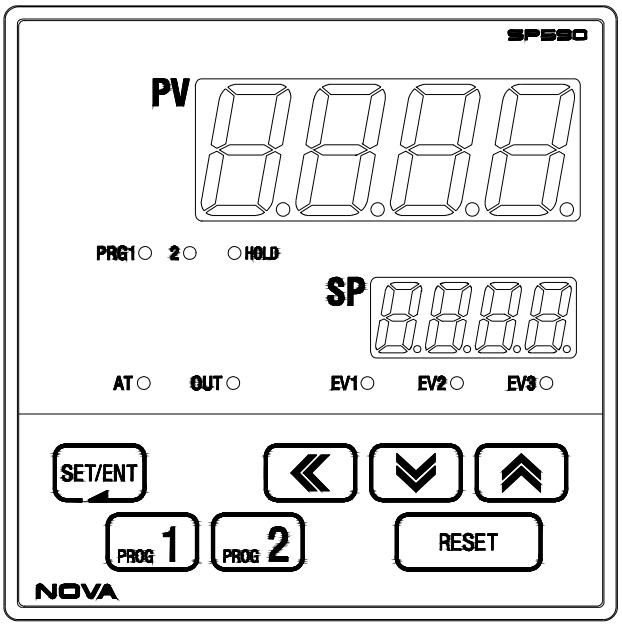

⦿ Control Keys

KEY	Contents
SET/ENT (ENTER)	- Used in switching between parameters or registering parameter settings. - Pressing SET/ENT Key at least 3 sec. switches between an operating display and an operating parameter setting display
▲ / ▼ (UP/DOWN)	- Used to change the value of parameters. - Used to move between GROUP and change SP value.
◀ (SHIFT)	- Used when shifting position to modify value.
PROG1(P1) PROG2(P2) RESET(RST)	- Pressing to operation Program 1 (pressing for 1 sec) - Pressing to operation Program 2 (pressing for 1 sec) - Pressing when Pattern End(pressing for 1 sec), and Program setting mode End.

⦿ LED Display

LED	Contents
EV1,2,3	- Lights on during EVENT occurs.
OUT	- Lights on when Control Output occurs.
AT	- Lights on when Auto-Tuning operates.
PRG1	- Lights on during operation of Program Pattern 1.
PRG2	- Lights on during operation of Program Pattern 2.
HOLD	- Lights on when operation of Program suspended.

3. Parameter Map

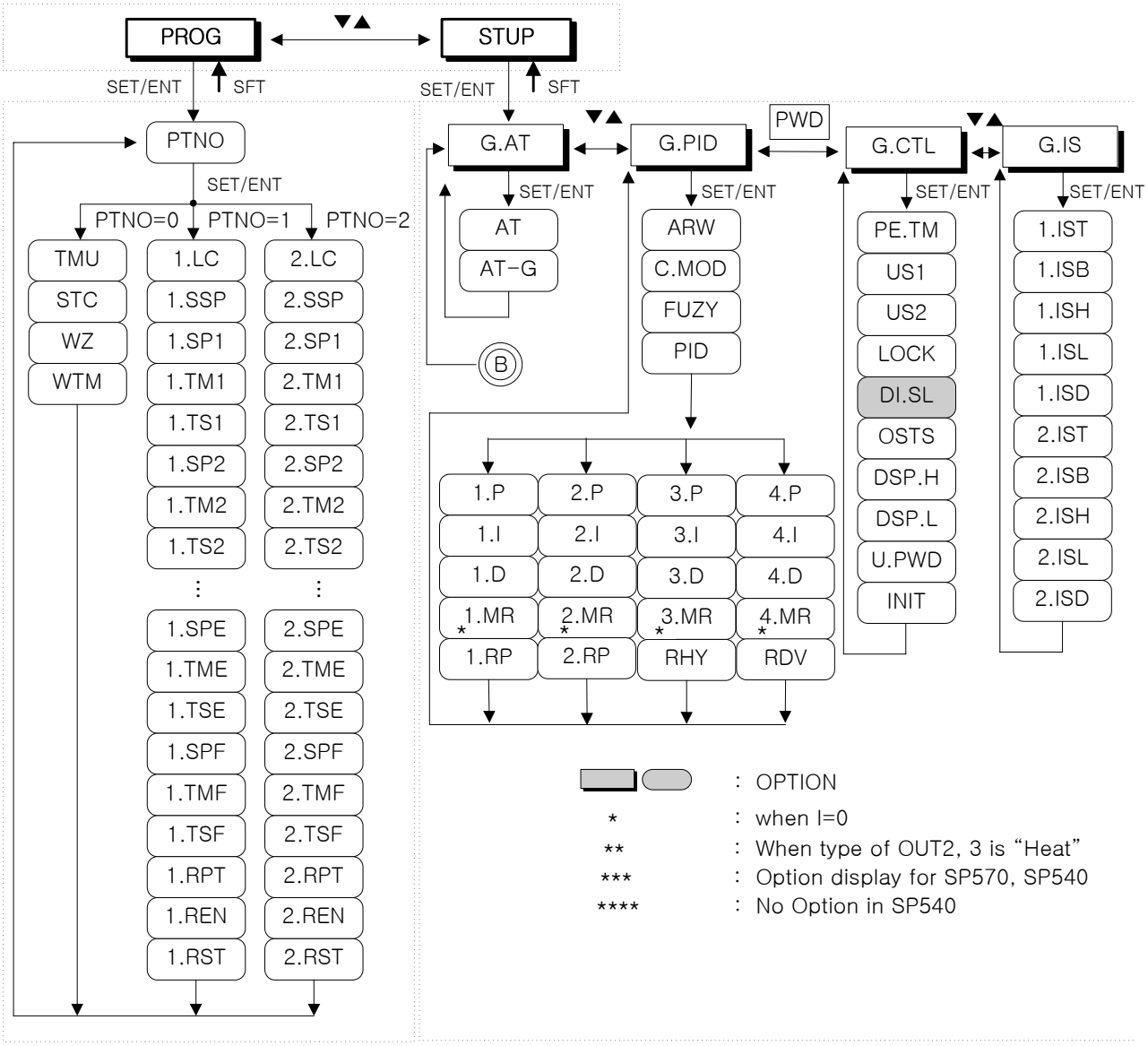

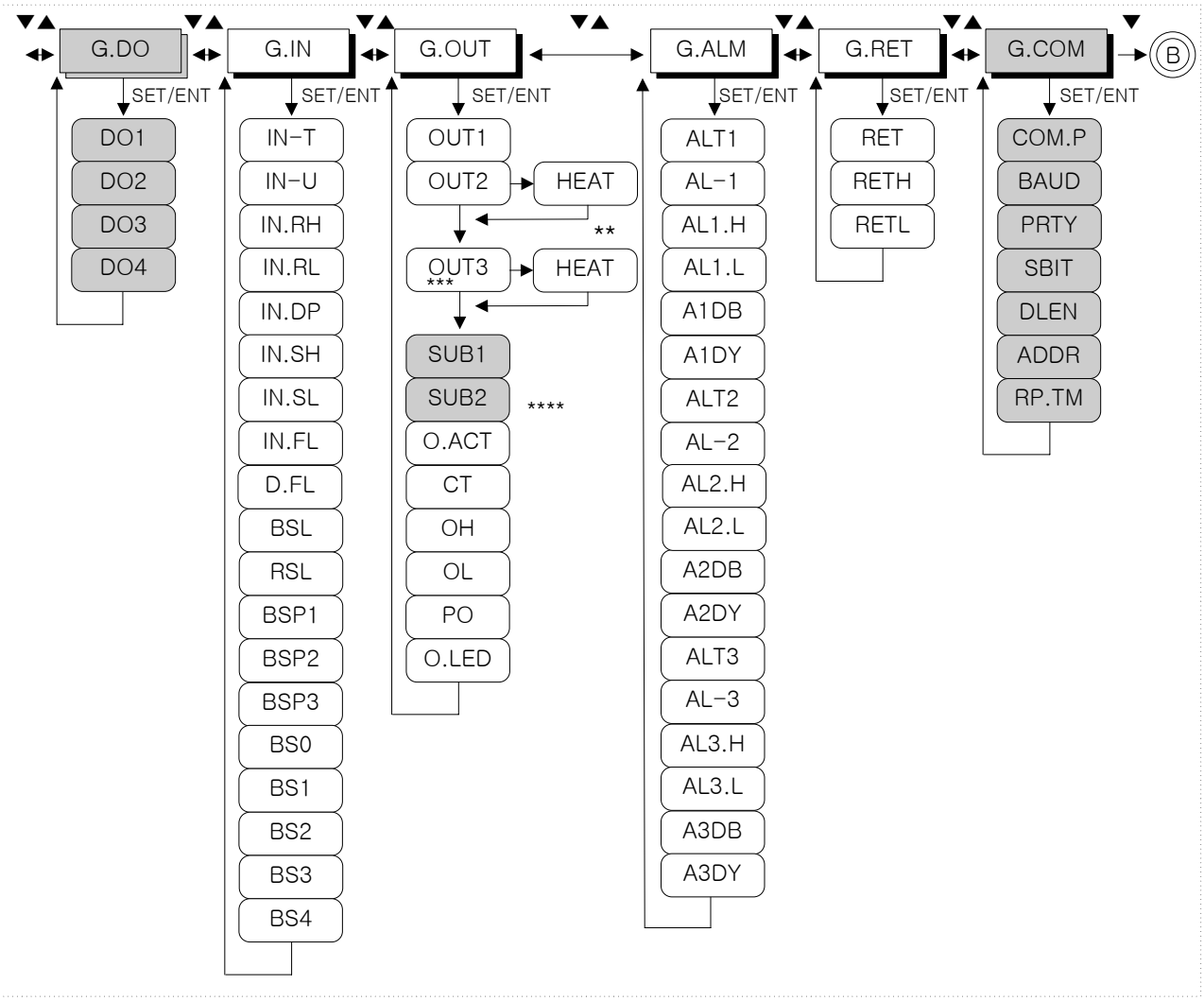
G.DO
G.IN
G.OUT
G.ALM
G.RET
G.COM
B
SET/ENT
DO1
DO2
DO3
DO4
IN-T
IN-U
IN.RH
IN.RL
IN.DP
IN.SH
IN.SL
IN.FL
D.FL
BSL
RSL
BSP1
BSP2
BSP3
BS0
BS1
BS2
BS3
BS4
OUT1
OUT2
HEAT
**
OUT3
***
HEAT
SUB1
SUB2
****
O.ACT
CT
OH
OL
PO
O.LED
ALT1
AL-1
AL1.H
AL1.L
A1DB
A1DY
ALT2
AL-2
AL2.H
AL2.L
A2DB
A2DY
ALT3
AL-3
AL3.H
AL3.L
A3DB
A3DY
RET
RETH
RETL
COM.P
BAUD
PRTY
SBIT
DLEN
ADDR
RP.TM

4. Flow of Operating Display

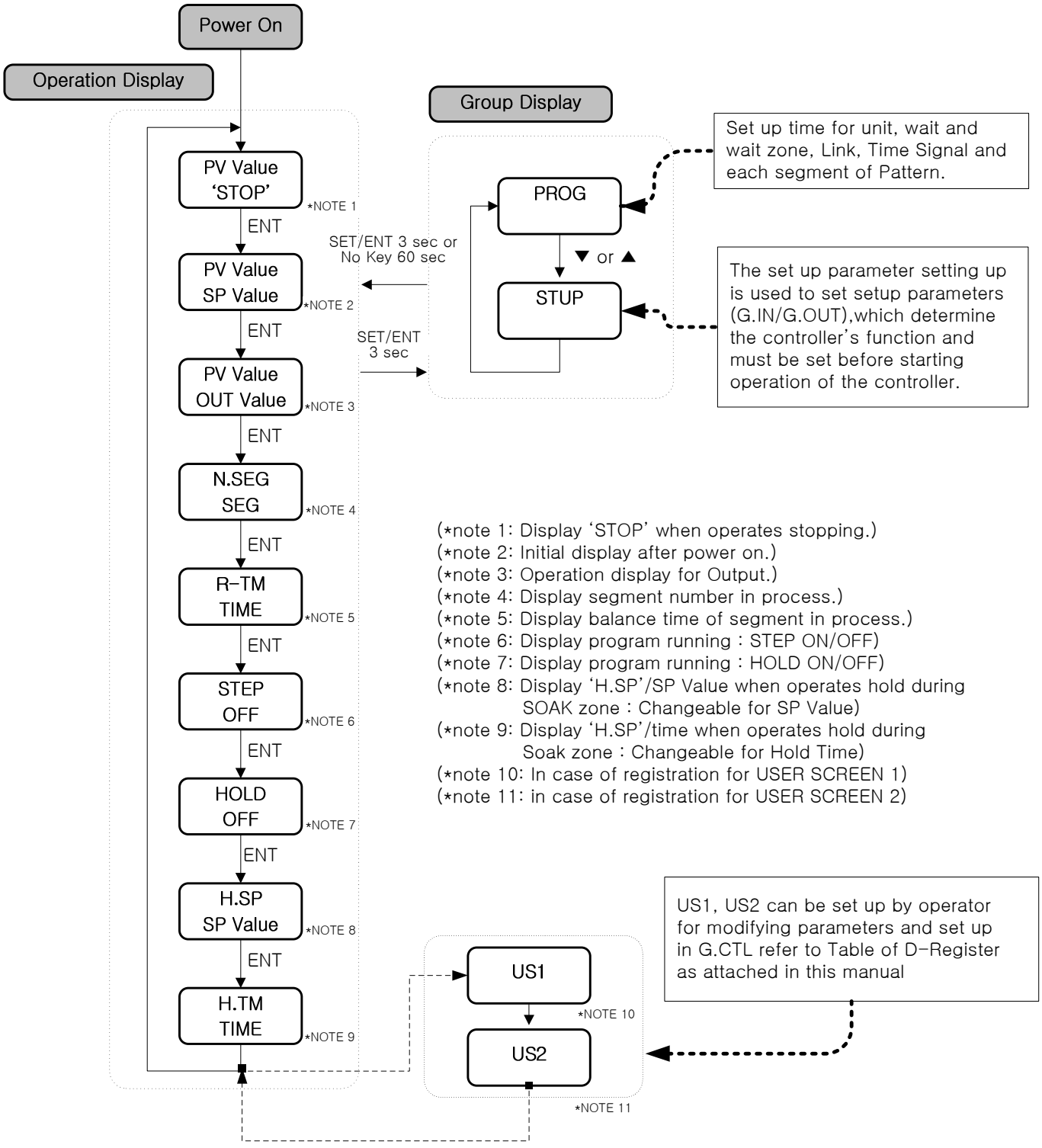

(*note 1: Display 'STOP' when operates stopping.)
(*note 2: Initial display after power on.)
(*note 3: Operation display for Output.)
(*note 4: Display segment number in process.)
(*note 5: Display balance time of segment in process.)
(*note 6: Display program running : STEP ON/OFF)
(*note 7: Display program running : HOLD ON/OFF)
(*note 8: Display 'H.SP'/SP Value when operates hold during SOAK zone : Changeable for SP Value)
(*note 9: Display 'H.SP'/time when operates hold during Soak zone : Changeable for Hold Time)
(*note 10: In case of registration for USER SCREEN 1)
(*note 11: in case of registration for USER SCREEN 2)

5. Setting Up Parameter in each Group.

5.1 Input Group(G.IN)

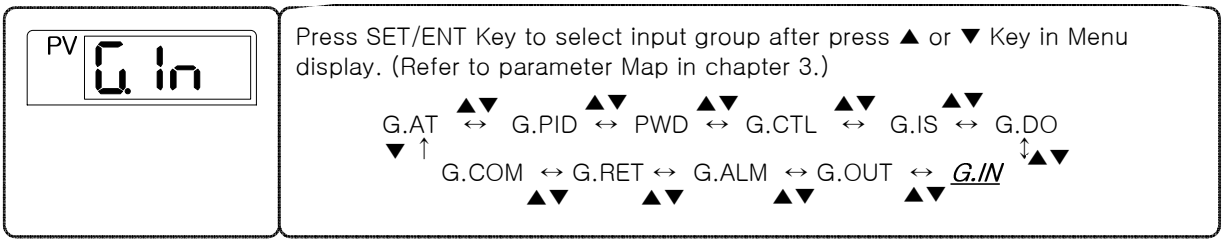

CAUTION

Change setting up parameters should be done for the first stage because it is suspended initializing parameters in other group around.

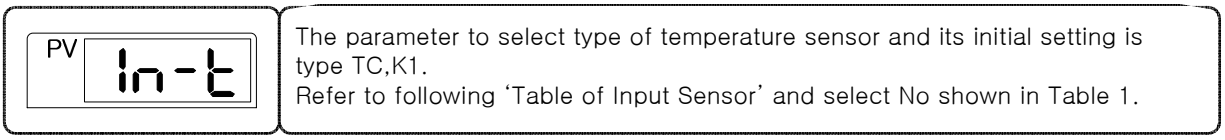

Table 1 : Type of Input Sensor

※display range : -5% ~ +105%

No.	TYPE	Temp.Range(℃)	Temp.Range(°F)	Group	DISP
1	K1	-200~1370	-300~2500	T/C	TC.K1
2	K2	-199.9~999.9	0~2300		TC.K2
3	J	-199.9~999.9	-300~2300		TC.J
4	E	-199.9~999.9	-300~1800		TC.E
5	T	-199.9~400.0	-300~750		TC.T
6	R	0~1700	32~3100		TC.R
7	B	0~1800	32~3300		TC.B
8	S	0~1700	32~3100		TC.S
9	L	-199.9~900.0	-300~1600		TC.L
10	N	-200~1300	-300~2400		TC.N
11	U	-199.9~400.0	-300~750		TC.U
12	W	0~2300	32~4200		TC.W
13	Platinel II	0~1390	32~2500		TC.PL
14	C	0~2320	32~4200		TC.C
15	PtA	-199.9~850.0	-300~1560	RTD	PTA
16	PtB	-199.9~500.0	-199.9~999.9		PTB
17	PtC	-19.99~99.99	-4.0~212.0		PTC
18	JPtA	-199.9~500.0	-199.9~999.9		JPTA
19	JPtB	-150.0~150.0	-199.9~300.0		JPTB
20	0.4~2.0V	0.400~2.000V		DCV	2V
21	1~5V	1~5V			5V
22	0~10V	0~10V			10V
23	-10~20mV	-10~20mV		mV	20M
24	0~100mV	0~100mV			100M

PV In-U	The parameter to select type of temperature unit for ℃ or ℉. Its initial selection is ℃ type. Refer to Table 1 when change temperature unit.
PV In.rH	The parameter to set High-Limit for input temperature measuring range.
PV In.rL	The parameter to set Low-Limit for input temperature measuring range.
PV In.dP	The parameter to set the position of decimal value in case that sensor type is mV or V. The position if decimal value can change 0 ~ 3. its initial set value is '1'.
PV In.SH	The parameter to set High-Limit of input measuring scale in case that sensor type is mV or V. its initial value of 'In.SH' is '100.0'
PV In.SL	The parameter to set Low-Limit of input measuring scale in case that sensor type is mV or V. its initial value of 'In.SL' is '0.0'
PV In.FL	The parameter to set PV filter for stabilizing from electromagnetic noise etc. it may effect violation of PV value. Its initial value of 'In. FL' is OFF and can change 1 sec to 120 sec.
PV dFL	The parameter to set for decreasing when PV is unstable due to senstive sensor response under normal control.
PV bSL	The parameter to set a direction of PV operation when sensor open. When set value of BSL is 'UP', PV operation is for High-Limit of Input Sensor. When set value of BSL is 'DOWN', PV operation is for Low-Limit of Input Sensor. Its initial setting is 'UP' (* in case of mV, V input, initialize 'OFF' and No checking Sensor-Open in 10V, 20mV, 100mV
PV rSL	The parameter to set whether using RJC or not in case that input sensor is thermocouple. Its initial setting of 'rSL' is 'ON'
PV bSP1 ⋮ PV bSP3	The parameter to set range of Bias in PV value enabling Bias process. Bias range can set Max 4. for further information, refer to Fig 1. and Fig 2.
PV bS0 ⋮ PV bS4	The parameter to set Bias value of PV in Bias range. For further information, refer to Fig 1. and Fig 2.

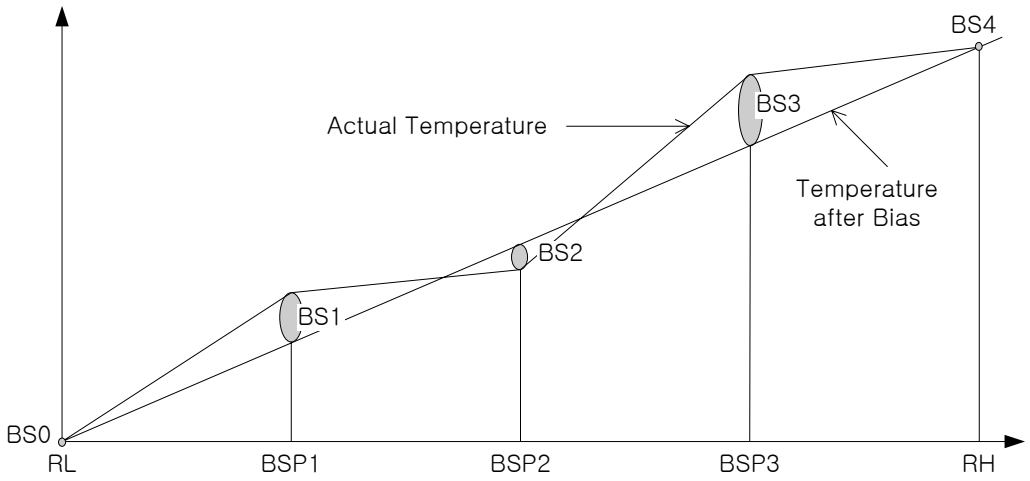

(Fig 1 : Example of Piece Bias)

Ex) There are +2℃ in 25℃, -1℃ in 50℃, +3℃ in 75℃ as temperature deviation in measuring actual temperature in range from 0℃ to 100℃, and try to take a Piece Bias, each Bias set value are shown as belows(RL=0℃, BSP1=25℃, BSP2=50℃, BSP3=75℃, RH=100℃)

BS0=0℃, BS1=-2℃, BS2=+1℃, BS3=-3℃, BS4=0℃

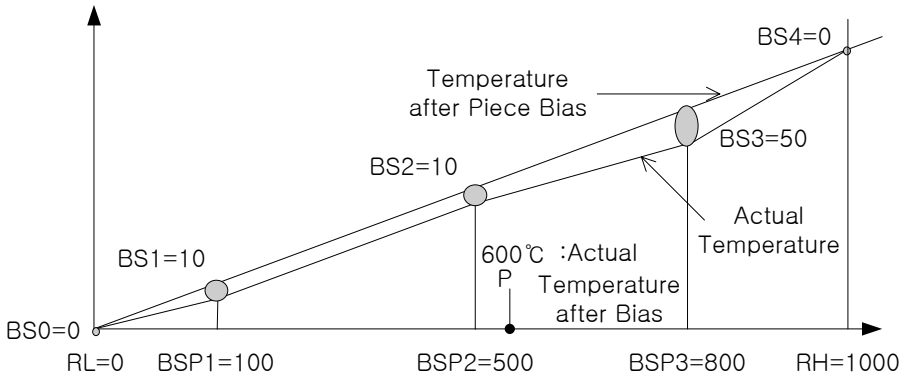

(Fig 2 : Example of Piece Bias Formula)

Temperature Bias Value = Temperature after Bias - Actual Temperature

Temperature in 600℃(P) after Bias

$$P = 600 + (600-BPS2) \times \frac{BS3 - BS2}{BSP3 - BSP2} + BS2$$

Sym	Parameter	Setting Range	Unit	Initial	Remark
IN-T	Input Type	Refer to Table 1 Type of Input Sensor	ABS	TC.K1	All time indicate
IN-U	Display Unit	℃ / °F	ABS	℃	T/C, RTD
IN.RH	Max. Value of Measurement Range	Within DEF. Range refer to Table 1 however, INRH > INRL	EU	1370	All time indicate
IN.RL	Min. Value of Measurement Range		EU	-200	All time indicate
IN.DP	Decimal Point Position	0～3	ABS	1	mV, V
IN.SH	Max Value of Input Scale	Within -1999～9999 however, INSH > INSL The Decimal Point Position is relay on the value of IN.DP	ABS	100.0	All time indicate
IN.SL	Min Value of Input Scale			0.0	mV, V
IN.FL	PV Filter	OFF, 1～120	sec	OFF	All time indicate
D.FL	Display Filter	OFF, 1～120	sec	OFF	All time indicate
BSL	BOUT SEL (note1)	OFF, UP, DOWN	ABS	UP (DCV=OFF)	All time indicate
RSL	RJC SEL	ON, OFF	ABS	ON	T/C
BSP1	Reference Bias Point1	EU(0.0～100.0%), RL≤BSP1≤BSP2≤BSP3≤RH	EU	EU(100.0%)	All time indicate
BSP2	Reference Bias Point2	EU(0.0～100.0%), RL≤BSP1≤BSP2≤BSP3≤RH	EU	EU(100.0%)	All time indicate
BSP3	Reference Bias Point3	EU(0.0～100.0%), RL≤BSP1≤BSP2≤BSP3≤RH	EU	EU(100.0%)	All time indicate
BS0	Bias Value for RL Point	EUS(-100.0～100.0%)	EUS	0	All time indicate
BS1	Bias Value for BSP1 Point	EUS(-100.0～100.0%)	EUS	0	All time indicate
BS2	Bias Value for BSP2 Point	EUS(-100.0～100.0%)	EUS	0	All time indicate
BS3	Bias Value for BSP3 Point	EUS(-100.0～100.0%)	EUS	0	All time indicate
BS4	Bias Value for RH Point	EUS(-100.0～100.0%)	EUS	0	All time indicate

(note 1) : S.OPN(Sensor-Open)=BOUT(Burn-Out)

5.2 Output Group(G.OUT)

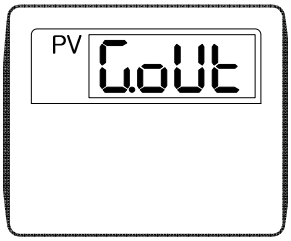

Press SET/ENT Key to select Output Group after press ▲ or ▼ Key in Menu display.

G.AT ↔ G.PID ↔ PWD ↔ G.CTL ↔ G.IS ↔ G.DO
↕
G.COM ↔ G.RET ↔ G.ALM ↔ *G.OUT* ↔ G.IN

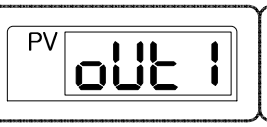

The parameter to set operation of output control (OUT 1 :RELAY OUTPUT)
Value set in HEAT, ALM1, ALM2, ALM3, RUN, IS1, IS2, TS, PEND.
Its initial setting is 'ALM1'

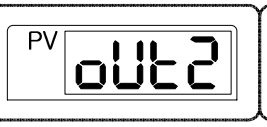

The parameter to set operation of output control (OUT 2 : 4~20mV or Pulse Output). Value set in 'HEAT, RET'.
Its initial setting is 'HEAT'.

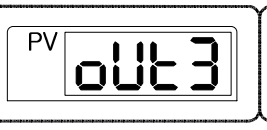

The parameter to set operation of output control (OUT 3: 4~20mV or Pulse Output) Value set in 'HEAT, RET'.
Its initial setting is 'RET'. (* SP570/540 can display when option select)

The parameter to set a type of control output when OUT 2 or OUT 3 sets in 'HEAT'. Value set in 'SSR (Pulse Output), SCR (4~20mV)'.
Its initial setting is 'SSR'.

The parameter to set the operation of Auxiliary Output Control (SUB 1: Relay Output). Value sets in 'HEAT, ALM1, ALM2, ALM3, RUN, IS1, IS2, TS, PEND',
Its initial setting is 'ALM2'. (* Display when option selects)

The parameter to set the operation of Auxiliary Output Control (SUB 2: Relay Output). Value sets in 'HEAT, ALM1, ALM2, ALM3, RUN, IS1, IS2, TS, PEND'.
Its initial setting is 'ALM3'.

※ Setting example of Output :
Control Output (OUT2 → SSR), Retransmission Output (OUT3 → RET), RELAY Output (OUT1 → ALM1, SUB1 → ALM2, SUB2 → ALM3)

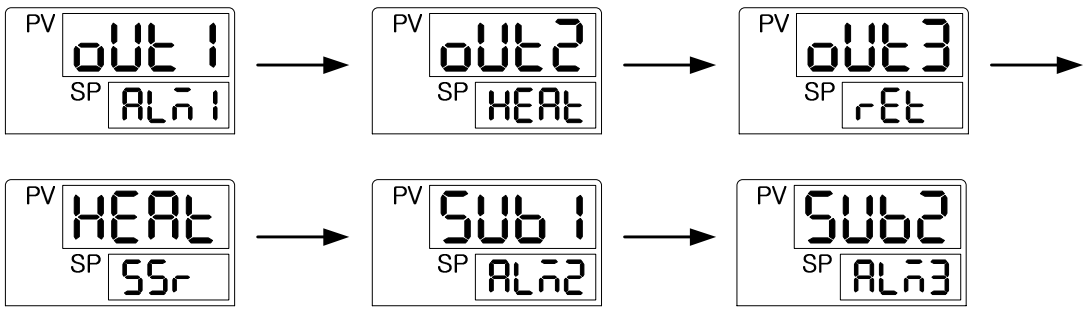

PV o.ACt	The parameter to set Reverse or Forward operation of Control Output. If 'O.Act' sets Reverse operation and PV value is lower the SP value, The control output is ON(Relay) or increase control output(SSR,SCR) If Forward operations, it works reverse. Its initial setting is 'REV'.
PV Ct	The parameter to set one cycle time of control ON/OFF when control output sets up Time-proportional control output. Its setting range is 1 ~ 1000 sec and '2' sec as initial setting.

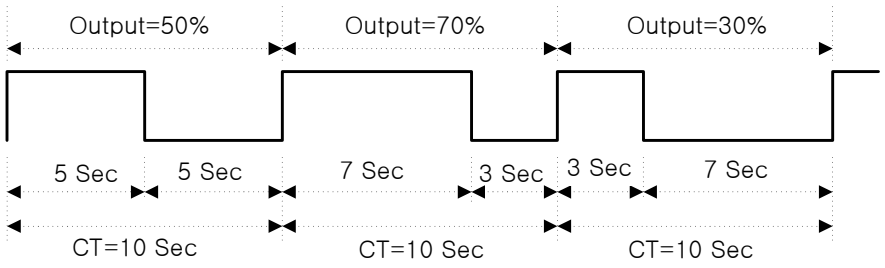

(Fig 3 : Example of Control Output in CT = 10 Sec)

PV oH	To set High-Limited value of Control Output.
PV oL	To set Low-Limited Value of Control Output. Control Output is limited within High and Low limited value.
PV Po	The parameter to set Preset Output value for emergency output. It makes output value in 'Po' after stopping control output calculated by PID algorithm when stop or A/D Error, Sensor open.
PV o.LEd	The parameter to set operation of MV OUT LAMP. SSR : MV LAMP is blinking within CT when SSR or Relay control output. SCR : MV LAMP is blingking irrespective of CT when SCR control output.

Sym	Parameter	Setting Range	Unit	Initial	Remark
OUT1	Select Output	HEAT, ALM1, ALM2, ALM3, RUN, IS1, IS2, TS, PEND	ABS	ALM1	All time indicate
OUT2	Select Output	HEAT, RET	ABS	HEAT	All time indicate
OUT3	Select Output	HEAT, RET	ABS	RET	(note)1
HEAT	Select Ouput Type	SSR, SCR	ABS	SSR	When OUT 2, 3 is in 'HEAT'
SUB1	Select Output	HEAT, ALM1, ALM2, ALM3, RUN, IS1, IS2, TS, PEND	ABS	ALM2	Option시
SUB2	Select Output	HEAT, ALM1, ALM2, ALM3, RUN, IS1, IS2, TS, PEND	ABS	ALM3	(note)2
O.ACT	Reverse and Forward	REV, FWD	ABS	REV	All time indicate
CT	Cycle Time 1	1 ~ 300 sec	sec	2 sec	All time indicate
OH	High-Limit Value of Output	OL+1Digit ~ 105.0% However,OH>OL	%	100.0%	All time indicate
OL	Low-Limit Value of Output	-5.0% ~ OH-1Digit However,OH>OL	%	0%	All time indicate
PO	Preset Out1	-5.0 ~ 105.0%	%	0.0%	All time indicate
O.LED	OUTPUT LED	SCR, SSR	ABS	SSR	All time indicate

(*note 1) : All time indicate (SP570, 540 is Option)
(*note 2) : Option (SP540 is SKIP)

5.3 Control Group(G.CTL)

PV G.CtL	Press 'SET/ENT Key to select Control Group after press ▼ or ▲ Key in Menu display. G.AT ▲▼↔ G.PID ▲▼↔ PWD ▲▼↔ *G.CTL* ▲▼↔ G.IS ▲▼↔ G.DO ↕▲▼ ▼ ↑ G.COM ↔ G.RET ↔ G.ALM ↔ G.OUT ↔ G.IN ▲▼ ▲▼ ▲▼ ▲▼
PV PE.tn	It makes a Output during the setting time when sets in Pattern End. (it makes a output when PEND sets in G.OUT) its initial setting is '15' sec. It operates in second unit counting.
PV US1 PV US2	The parameter to set User Screen for display, confirmation and common use of parameter. In order to register US1, 2, refer to the parameter number in 'Table of D-Register. Its initial setting of US1, 2 is 'OFF'.
PV LoCt	The parameter to set parameter display for common using or checking. If LOCK sets 'ON',prohibit to set all parameter and SP value in operation display as well.
PV dI.SL	The parameter to set operation status of the controller in effect of external contact input when it sets option(/DI). The Controller operation of DI.SL setting is refer to 'Table of DI Operation' as shown on belows.

Table 2 : DI Operation

DI.SL	DI1	DI2	Operation
OFF	-	-	No work
1	off	-	HOLD OFF
	on	-	HOLD ON
	-	off	STEP OFF
	-	on	STEP ON
2	off	-	RESET
	on	-	PROG RUN
	-	off	PROG1
	-	on	PROG2

The parameter to display control output status (OUT1, 2, 3, SUB 1, 2) of the controller to the operation display.
You can check the control output status in operation display if 'oStS' sets.

The parameter to set High-Limited value display of Sensor Input in PV display window. PV display window only shows the value of DSP.H even if it sets value higher than DSP.H from the sensor. But controller operates in actual value

The parameter to set Low-Limited value display of Sensor Input in PV display window. PV display window only shows the value of DSP.L even if it sets value higher than DSP.L from the sensor. But controller operates in actual value

The parameter to set PASSWORD in Controller. Set U/PWD in PASSWORD screen before entering control group (G.CTL) of parameter group.
Not allow for entering parameter group if input value is not the same as registered password. Its initial setting U.PWD is '0'.

CAUTION

- Be sure not to forget PASSWORD after registration.
- If Forget the PASSWORD, Not available for operator's maintenance.
  Need to return the controller for our service center and sales office.

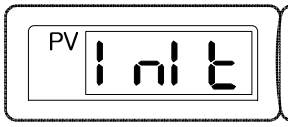

The parameter to initialize the controller. It is initialing when 'INIT' sets 'ON' (However, not allow communication for initializing)

CAUTION

It will be initialized all parameters of the controller when 'INIT' parameter sets.
Be sure to avoid any kind of inconvenience.

Sym	Parameter	Setting Range	Unit	Initial	Remark
PE.TM	Pattern End Time	OFF, 1～9999(sec)	ABS	15 (sec)	All time indicate
US1	User Screen	OFF, D-Register No(1～1299)	ABS	OFF	All time indicate
US2	User Screen	OFF, D-Register No(1～1299)	ABS	OFF	All time indicate
LOCK	Key Lock	OFF, ON(No Editing)	ABS	OFF	All time indicate
DI.SL	DI Selection	OFF, 1, 2 Ref to Table 2 : DI Operation	ABS	OFF	DI Option
OSTS	Output Status	OFF, ON	ABS	OFF	All time indicate
DSP.H	Display High Limit	EU(-5.0～105.0%) : but DSP.L<DSP.H	EU	EU(105.0%)	All time indicate
DSP.L	Display Low Limit	EU(-5.0～105.0%) : but DSP.L<DSP.H	EU	EU (-5.0%)	All time indicate
U.PWD	User password	0～9999	ABS	0	All time indicate
INIT	Parameter Initialization	OFF, ON	ABS	OFF	All time indicate

5.4 Program Group(G.PROG)

PV PrOG

Press 'SET/ENT Key at least 3 sec to select Program Group in operation display.

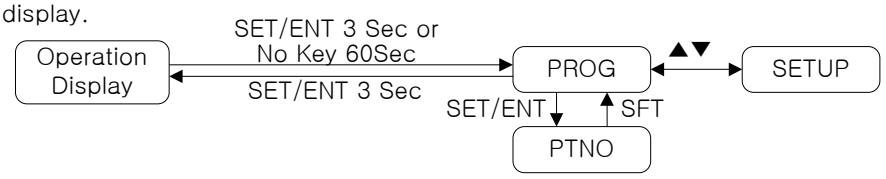

PV tMU

The parameter to set Time Unit in Program Pattern.
Setting range of 'TMU' is the both HH. MM (hour. min) and MM. SS (min. sec).
Its initial setting is HH.MM.

PV StC

The parameter to set the methods of SP operation when Program runs.
STC (Start Code) is able to set SSP (SSP start) and PV (PV start).
Its initial setting is 'PV'. Refer to following 'STC Operation' in Fig. 4.

※ STC Operation

- SSP START(STC = SSP)

  It is running from initial SSP set by starting program run to TM1 (Segment Time) set by SP1 (Target SP) in Segment 1.

- PV START(STC = PV)

  It is running from current PV in initial SP when program start to Target SP sets by next segment. Its running time is calculated and by referring the contents of setting program as of time passed to initial set point and runs.

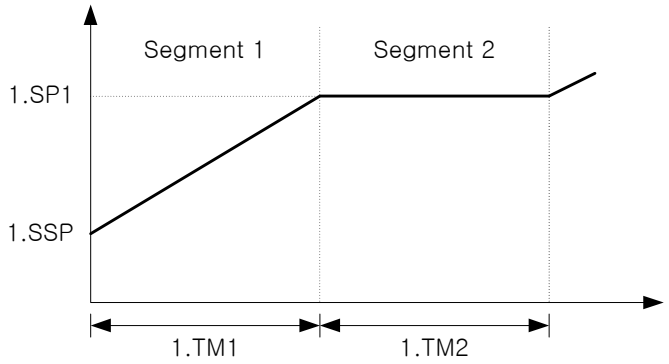

(Fig 4 : SSP START)

For a soaking Segment, which uses the same target setpoint as preceding RAMP segment, it is running with a period of time for duration of the soaking segment.(Segment 2)

① Segment 2 is in first Soaking Range

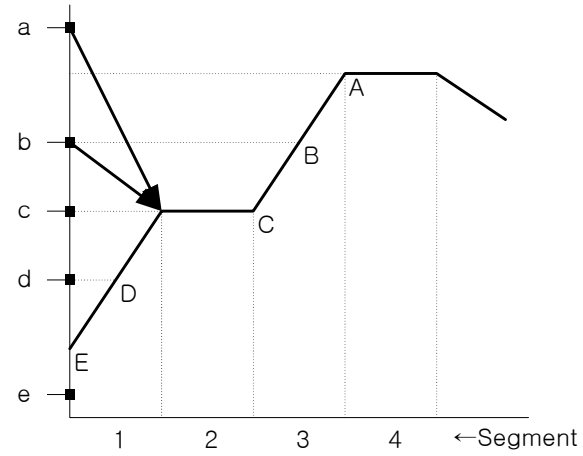

PV in program starts run	Starting point of program
a	C
b	C
c	C
d	D
e	E(SSP)

② Segment 3 is in first Soaking Range

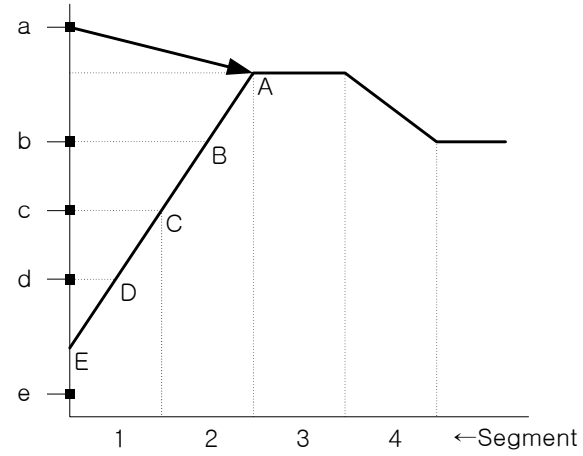

PV in program starts run	Starting point of program
a	A
b	B
c	C
d	D
e	E(SSP)

③ In case No Soaking Range

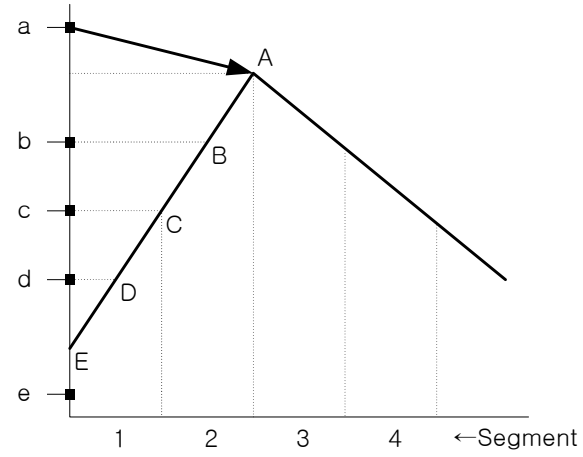

PV in program starts run	Starting point of program
a	A
b	B
c	C
d	D
e	E(SSP)

④ In case that have only Ascending Segment

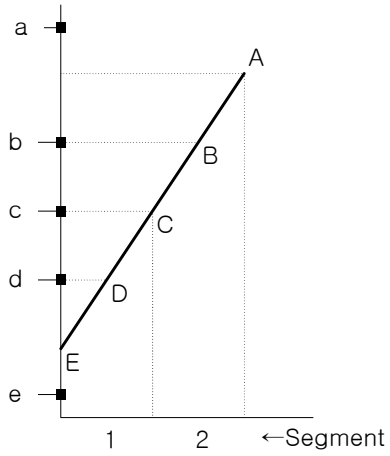

PV in program starts run	Starting point of program
a	Not yet start program run
b	B
c	C
d	D
e	E(SSP)

PV 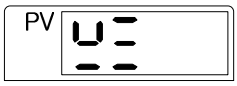	The parameter for setting Wait Zone of Wait Function. The Deviation of set value of WZ and Target SP value in each segment is the Wait Zone. In Ramp Zone, it is working only when enter to Soak Zone. When WZ = OFF (0.0), it is not working for Wait Function.
PV 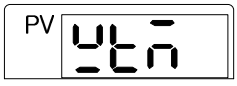	The parameter for setting Wait Time during wait function. Setting range of WTM is OFF(0.00) ~ 99.59. When it sets 'OFF', it doesn't work wait function.

※ Wait Function

The wait function holds off the transition of segment until deviation is cleared up. The use of this function is enabled by defining a wait zone,which is a deviation range to determine the follow-up of PV data input, and a wait time,which is a period of waiting time until PV data enters the wait zone. When PV input enters the wait zone within the wait time, the operation shifts to the next. If not,the shift takes place as soon as the wait time is over

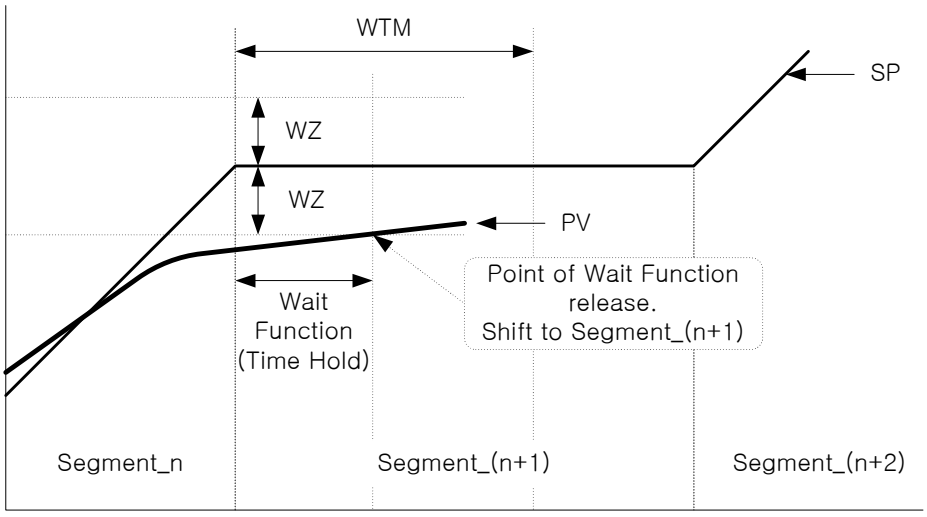

(Fig 5 : Wait Function - Wait Function Release within Waiting Time)

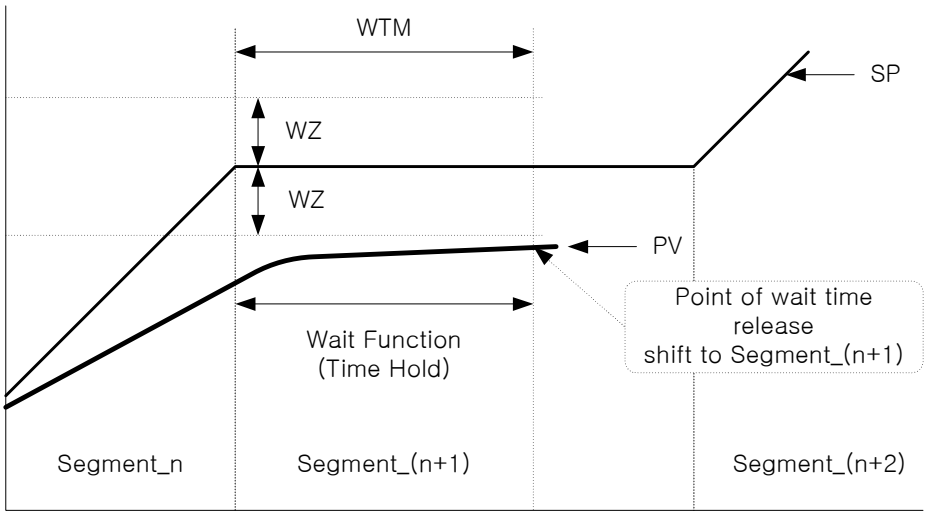

(Fig 6 : Wait Function /PV input data can't enter the wait zone)

PV 1LC	The parameter to set controller operation when program runs stop. 1.The settable operations in LC (Link Code) are 'RST (RESET=STOP)'.'HOLD','PTN1', 'PTN2'. Its initial setting is 'RST'. Refer to 'Table 3 : LINK CODE ' as under.

Table 3 : LINK CODE

LINK CODE	Controller operation when program runs stop
RST	Shift to RESET(STOP) (Operation Hold)
HOLD	Runs to SP of Last Segment (When press the RESET Key)
PTN1	Runs PTN1 (Program Pattern-1) (Infinity Repeat when current Program is 'PTN1'.)
PTN2	Runs PTN2 (Program Pattern-2) (Infinity Repeat when current Program is 'PTN2'.)

PV 1SSP	The parameter to set SP (Start Set Point) when Program pattern starts run. It runs for program running when STC is 'SSP'.

PV 1.SP1	The parameter to set TSP (Target Set Point) in Segment 1. Maximum setting TSP is 15(1~F).
PV 1.tM1	The parameter to set Running time of Segment 1. 1. Setting ranges of 'TM1' are 'OFF,1~99.59 sec. It displays HH.MM or MM.SS by setting TMU parameter of 'Program Group'.
PV 1.tS1	The parameter to set whether using of TS (Time Signal) function in Segment 1 If TS sets 'ON' in the Segment, TS1 is 'ON' during the time period from Segment start and End as sets in the time of TM1
. . .	. . .
PV 1.SPF	The parameter to set TSP (Target Set Point) in Segment-15. TSP can set max 15 points in one program pattern.(1~F)
PV 1.tMF	The parameter to set operation time of Segment-15. Setting range of '1.TMF' is OFF,1~99.59. It displays HH.MM and MM.SS by setting TMU parameter of 'Program Group'.
PV 1.tSF	The parameter to set whether using of TS (Time Signal) function in Segment 15. If TS sets 'ON' in the Segment, TS1 is 'ON' during the time period from Segment start and End as sets in the time of '1.TMF'.
PV 1.rPt	The parameter to set Repeat Time of Segment when program runs. The setting ranges of RPT are 0(infinite repeat),1~999 cycle. Its initial setting is '1'.
PV 1.rEn	The parameter to set last segment number in when repeat running segment. The setting range of 'I.REN' is 0, 1 ≤ 1.RST ≤ 1.REN. Its initial setting is '0'.(no setting in repeat running)
PV 1.rSt	The parameter to set start segment number in when repeat running segment. The setting range of 'I.RET' is 0, 1 ≤ 1.RST ≤ 1.REN. Its initial setting is '0'.(no setting in repeat running)
. . .	※ The parameter information of Program Pattern-2 is as the same as Program Pattern-1

CAUTION

If it use only for 5 segment of 15(1~F), sets '6.TM1' = OFF then next segment will automatically skipped.

Sym	Parameter	Setting Range	Unit	Initial	Remark
TMU	Time Unit	HH.MM, MM.SS	ABS	HH.MM	All time indicate
STC	Start Code	SSP, PV	ABS	PV	All time indicate
WZ	Wait Zone	OFF(0), EUS(0.0%+1digit～100.0%)	EUS	OFF (0)	All time indicate
WTM	Wait Time	OFF(0.00)～99.59	TIME	OFF (0.00)	All time indicate
n.LC	Link Code	RST, HOLD, PTN1, PTN2	ABS	RST	All time indicate
n.SSP	Start SP	EU(0.0～100.0%)	EU	EU(0.0%)	All time indicate
n.SP1	Target SP1	EU(0.0～100.0%)	EU	EU(0.0%)	All time indicate
n.TM1	Segment Time1	Time Set : OFF, 0.00～99.59	TIME	OFF	All time indicate
n.TS1	Time Signal1 On/Off	ON, OFF	ABS	OFF	All time indicate
n.SP2	Target SP2	EU(0.0～100.0%)	EU	EU(0.0%)	All time indicate
n.TM2	Segment Time2	Time Set : OFF, 0.00～99.59	TIME	OFF	All time indicate
n.TS2	Time Signal2 On/Off	ON, OFF	ABS	OFF	All time indicate
⋮	⋮	⋮	⋮	⋮	⋮
n.SPF	Target SP15	EU(0.0～100.0%)	EU	EU(0.0%)	All time indicate
n.TMF	Segment Time15	Time Set : OFF, 0.00～99.59	TIME	OFF	All time indicate
n.TSF	Time Signal15 On/Off	ON, OFF	ABS	OFF	All time indicate
n.RPT	Segment Repeat	0～999(0:Infinite Repeat)	ABS	1	All time indicate
n.REN	Repeat End Segment	0, 1 ≤ n.RST ≤ n.REN ≤ 15(F)	ABS	0	All time indicate
n.RST	Repeat Start Segment	0, 1 ≤ n.RST ≤ n.REN ≤ 15(F)	ABS	0	All time indicate

5.5 Digital Output Group(G.DO)

PV G.do	Press SET/ENT Key to select Digital Output Group after press ▲ or ▼ Key in Menu display. G.AT ↔ G.PID ↔ PWD ↔ G.CTL ↔ G.IS ↔ *G.DO* ▼ ↑ G.COM ↔ G.RET ↔ G.ALM ↔ G.OUT ↔ G.IN ↕▲▼
PV do1	The parameter to set the function of DO1 when controller has DO(/Do2 or / Do4) option. The Setting range of DO options are shown under as 'Table 4 : DO Setting Type'.
PV do2	The parameter to set the function of DO2 when controller has DO(/Do2 or / Do4) option. The Setting range of DO options are shown under as 'Table 4 : DO Setting Type'.
PV do3	The parameter to set the function of DO3 when controller has DO(/Do4) option. The Setting range of DO options are shown under as 'Table 4 : DO Setting Type'.
PV do4	The parameter to set the function of DO4 when controller has DO(/Do4) option. The Setting range of DO options are shown under as 'Table 4 : DO Setting Type'.

Table 4 : DO Setting Type

Set Value	Function
ALM1	Alarm-1
ALM2	Alarm-2
ALM3	Alarm-3
IS1	Inner Signal-1
IS2	Inner Signal-2
TS	Time Signal

Set Value	Function
PEND	Pattern End
UP	When Running Segment is Ascending Ramp
DOWN	When Running Segment is Descending Ramp
SOAK	Running Segment is Soaking
RUN	Program Run

Sym	Parameter	Setting Range	Unit	Initial	Remark
DO1	DO1 Type	ALM1, ALM2, ALM3, IS1, IS2, TS, PEND, UP, DOWN, SOAK, RUN	ABS	OFF	Option
DO2	DO2 Type	ALM1, ALM2, ALM3, IS1, IS2, TS, PEND, UP, DOWN, SOAK, RUN	ABS	OFF	Option
DO3	DO3 Type	ALM1, ALM2, ALM3, IS1, IS2, TS, PEND, UP, DOWN, SOAK, RUN	ABS	OFF	Option
DO4	DO4 Type	ALM1, ALM2, ALM3, IS1, IS2, TS, PEND, UP, DOWN, SOAK, RUN	ABS	OFF	Option

5.6 Inner Signal Group(G.IS)

PV G.I S	Press SET/ENT Key to select Inner Signal Group after press ▲ or ▼ Key in Menu display G.AT ↔ G.PID ↔ PWD ↔ G.CTL ↔ G.IS ↔ G.DO G.COM ↔ G.RET ↔ G.ALM ↔ G.OUT ↔ G.IN
PV 1.1 St	The parameter to set the conditions of Inner Signal operation. Setting ranges of '1.IST (Inner Signal)' are 'NPV (Current Value of PV)','NSP (Current Value of SP)','O.BD(Out Band)'. Its initial setting is 'NPV'.
PV 1.1 Sb	The parameter to set the direction of zone that the inner signal operates. Setting ranges of '1.ISB (Inner Signal Band)'are 'I.BD (In Band)' or 'O.BD (Out Band)'. Its initial setting is 'I.BD'.
PV 1.1 SH	The parameter for setting High-Limited value of Inner Signal operate Zone.
PV 1.1 SL	The parameter for setting Low-Limited value of Inner Signal operate Zone.
PV 1.1 Sd	The parameter to set Output Delay Time under the condition of Inner Signal operates.
. . .	The detailed contents of Inner Signal-2 is the same as Inner Signal-1.

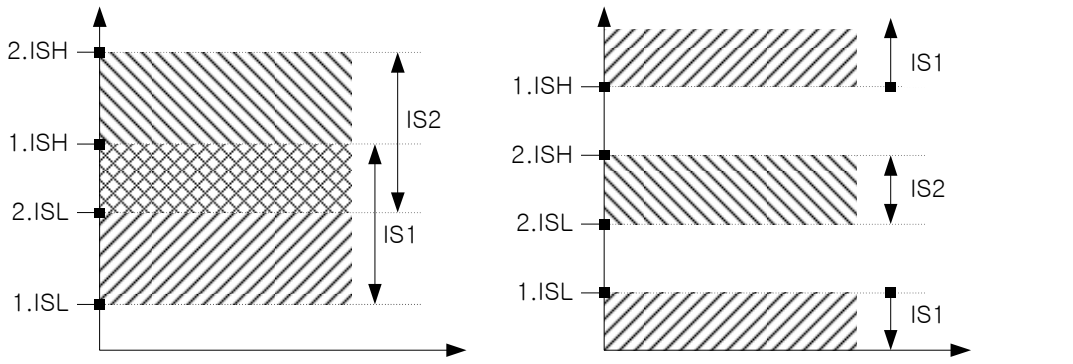

a) In case that 1.ISB, 2.ISB is in I.BD

b) In case that 1.ISB=I.BD, 2.ISB is in O.BD

(Fig 7 : Example of Inner Signal Zone)

Sym	Parameter	Setting Range	Unit	Initial	Remark
1.IST	Inner Signal TYPE	NPV, NSP, TSP	ABS	NPV	All time indicate
1.ISB	Inner Signal BAND	I.BD(In Band), O.BD(Out Band)	ABS	I.BD	All time indicate
1.ISH	Inner Signal Range High 1	EU(0.0～100.0%), but 1.ISH ≥ 1.ISL	EU	EU (0.0%)	All time indicate
1.ISL	Inner Signal Range Low 1	EU(0.0～100.0%), but 1.ISH ≥ 1.ISL	EU	EU (0.0%)	All time indicate
1.ISD	Inner Signal DELAY TIME	OFF(00.00)～99.59 (MM:SS)	TIME	OFF	All time indicate
2.IST	Inner Signal TYPE	NPV, NSP, TSP	ABS	NPV	All time indicate
2.ISB	Inner Signal BAND	I.BD(In Band), O.BD(Out Band)	ABS	I.BD	All time indicate
2.ISH	Inner Signal Range High 2	EU(0.0～100.0%), but 2.ISH ≥ 2.ISL	EU	EU (0.0%)	All time indicate
2.ISL	Inner Signal Range Low 2	EU(0.0～100.0%), but 2.ISH ≥ 2.ISL	EU	EU (0.0%)	All time indicate
2.ISD	Inner Signal DELAY TIME	OFF(00.00)～99.59 (MM:SS)	TIME	OFF	All time indicate

5.7 PID Group(G.PID)

PV G.PId	Press SET/ENT Key to select PID Group after press ▲ or ▼ Key in Menu display G.AT ↔ *G.PID* ↔ PWD ↔ G.CTL ↔ G.IS ↔ G.DO G.COM ↔ G.RET ↔ G.ALM ↔ G.OUT ↔ G.IN
PV Ar-y	The parameter to set deviation width to prevent overshoot. When the control output reaches High-Limited value, for preventing Overshoot by integral action, it is stop ordinary action for integrals and shift for ARW(Anti-Reset Wind-Up). When the setting of 'ARW' is 'AUTO', it is acting automatically. Other setting is acting by setting value.
PV C.mod	Set D.DV or D.PV as PROG mode in PID control. If you select the D.DV on the control mode, overshoot is small but it take a long time for reaching the TSP because the MV variation rate is low. Selecting the D.PV, overshoot is big but it is faster than the D.DV for reaching the TSP because the MV variation rate is high.
PV FUzy	The parameter to select the use of 'Fuzzy' function. The function can be effective suppressing overshoot and reducing load variation that may occur when PV reaches SP. (Refer to 'Fig 8 Overshoot suppressing by Fuzzy function')

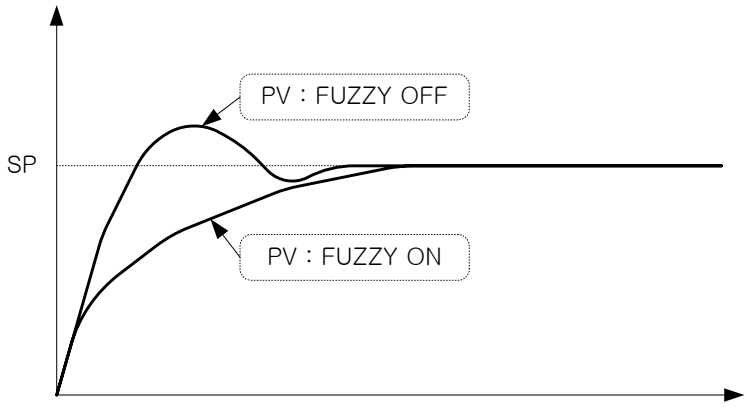

(Fig 8 Overshoot suppressing by Fuzzy function)

PV PId	The parameter to set the number of PID Group to be acting one of two PID parameter when relative parameter sets.
PV 1.P	The parameter to set the proportional operation for PID control. Setting range of '1.P' is '0.1 ~ 999.9%'. Its initial setting is '10.0%'.
PV 1.I	The parameter to set the integration time for PID control. Setting ranges of '1.I' are 'OFF','1 ~ 6000 sec'. Its initial setting is 120 sec.

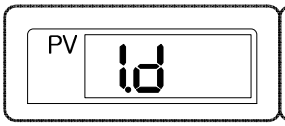

The parameter to set derivation time for PID control.
Setting ranges of '1.D' are 'OFF','1 ~ 6000 sec'.
Its initial setting is '30 sec'.

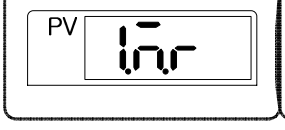

The parameter to set apply for manual setting value in PID integral time contents when Integral time(I) of PID control is 'OFF'.
Setting value of '1.MR(Manual Reset) is not workable when setting value of '1.I' is 'OFF'.

. . .

※ The contents of PID number 2 is the same as PID number 1.

The parameter to set divide each zone of 3 PID. It is setting for Number 1 in 'IN.RL(mV, IN.SL when input V-Sensor)~ 1.RP, and Number 2 in '1.RP ~ 2.RP, Number 3 in '2.RP ~ IN.RH (mV, IN.SH when input V-Sensor).

The parameter to set divide each zone of 3 PID. It is setting for Number 1 in 'IN.RL(mV, IN.SL when input V-Sensor)~ 1.RP, and Number 2 in '1.RP ~ 2.RP, Number 3 in '2.RP ~ IN.RH (mV, IN.SH when input V-Sensor).

The parameter to set hysteresis width of zone PID.

The parameter to set deviation of deviation PID.

Sym	Parameter	Setting Range	Unit	Initial	Remark
ARW	Anti-Reset Wind-Up Select	Auto(0.0) ~ 200.0%	%	100.0	All time indicate
C.MOD	Control Mode	D.DV, D.PV	ABS	D.PV	All time indicate
FUZY	Fuzzy	OFF, ON	ABS	OFF	All time indicate
PID	PID Number	MENU(0) or 1 or 2	ABS	MENU	All time indicate
n.P	n.Proportional	0.1~999.9%	%	10.0%	All time indicate
n.I	n.Pro/Time	OFF, 1 ~ 6000 sec	sec	120 sec	All time indicate
n.D	n.Derivation time	OFF, 1 ~ 6000 sec	sec	30 sec	All time indicate
n.MR	n.Manual Reset	-5.0 ~ 105.0%	%	50.0%	When I=0
1.RP	Reference Point1	EU(0.0%)≤ 1.RP≤ 2.RP	EU	EU(100.0%)	PID 1Group
2.RP	Reference Point2	1.RP≤ 2.RP≤ EU(100.0%)	EU	EU(100.0%)	PID 2Group
RHY	Reference Hystersys	EUS(0.0~10.0%)	EU	EU(0.3%)	PID 3Group
RDV	Reference Deviation	EUS(0.0~100.0%)	EU	EU(0.0%)	PID 4Group

5.8 Auto Tuning Group(G.AT)

PV G.AT	Press SET/ENT Key to select Auto Tunning Group after press ▲ or ▼ Key in Menu display. G.AT ↔ G.PID ↔ PWD ↔ G.CTL ↔ G.IS ↔ G.DO G.COM ↔ G.RET ↔ G.ALM ↔ G.OUT ↔ G.IN
PV AT	The parameter to set AUTO TUNING carry on. When AT sets 'ON' AUTO TUNING carry on.(can set when operate Program Run) It will be skipped when sets 'STOP'.

※ AUTO TUNING(AT)

- The AUTO TUNING is used to have the controller measure process characteristics and automatically set the most appropriate PID parameter. It makes ON/OFF control output to have Limit Cycle for control object and get the appropriate PID value calculated by steps and the responses.
- Methods of AUTO TUNING
  AUTO TUNING starts after TUNING Point for AUTO TUNING sets SP. The PID value sets automatically in PID zone positioned SP by setting up RP.

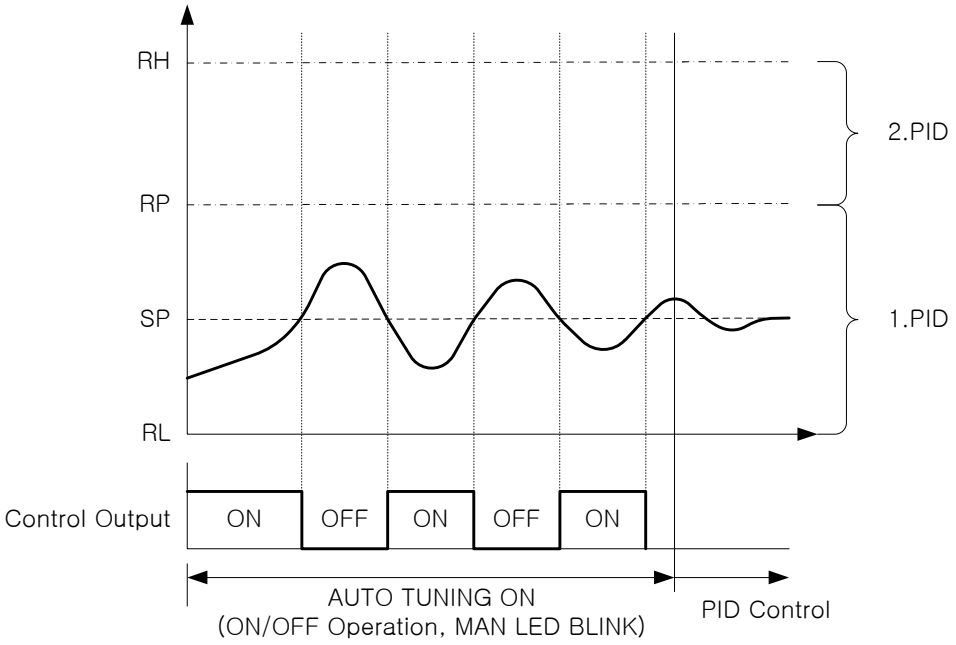

(Fig 9 : AUTO TUNING)

- Display during AUTO TUNING
  AT LED is blinking by 500ms interval.

- Change SP value during AUTO TUNING.
  If the SP is changed during AUTO TUNING, the Tuning Point is maintained. After AUTO TUNING, it starts control for changed SP value.

  - Change PID parameter during AUTO TUNING.
  It can be changeable for PID value during AUTO TUNING however, it obtains by calculation automatically after AUTO TUNING. But, when compulsory ending of AUTO TUNING except normal operation, it is controlled by changed PID value.

- When abnormal Ending of AUTO TUNING.
① Compulsory Ending of AUTO TUNING
② Input Sensor Open (S.OPN)during AUTO TUNING
③ Measuring Cycle of AUTO TUNING is exceeding 24hour.

PV AT-G

The parameter to set proportional PID control by obtaining AUTO TUNING. Reduce AT-G, Cycle time became rapid and, Increase AT-G, control status became more stable. If it is smaller, hunting become more and more.

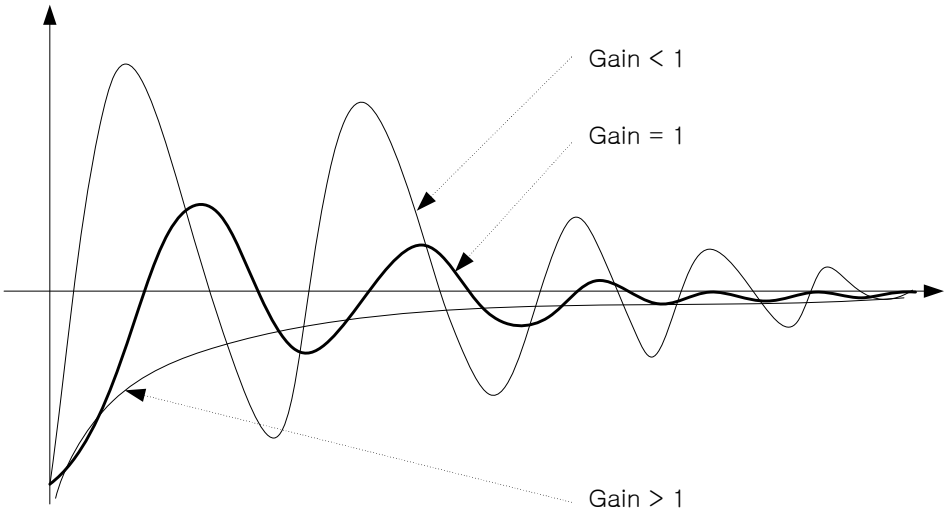

(Fig 10 : AT GAIN)

Sym	Parameter	Setting Range	Unit	Initial	Remark
AT	Auto Tuning	OFF, ON	ABS	OFF	When Program runs
AT-G	AT Gain	OFF, ON	ABS	OFF	All time indicate

5.9 Alarm Group(G.ALM)

PV G.ALM	Press SET/ENT Key to select Alarm Group after press ▲ or ▼ Key in Menu display. G.AT ↔ G.PID ↔ PWD ↔ G.CTL ↔ G.IS ↔ G.DO G.COM ↔ G.RET ↔ G.ALM ↔ G.OUT ↔ G.IN
PV ALT1	The parameter to set Alarm-1. The type of Alarm shown as 'Table 5 Type of Alarm
PV AL-1	The parameter to set Alarm point by setting 'ALT1'. (Display in the case of Upper-and-Lower-Limit alarm of set point)
PV AL1H	Upper-Limit alarm in the case of Upper-Limit of Deviation, Upper-and-Lower-Limit alarm and within Upper-and-Lower-Limit Range of Deviation
PV AL1L	Lower-Limit alarm in the case of Lower-Limit of Deviation, Upper-and-Lower-Limit alarm and within Upper-and-Lower-Limit Range of Deviation
PV A1db	The parameter to set DEAD BAND (hysteresis) of Alarm-1.
PV A1dY	The parameter to set Delay Time of Alarm-1 output.
. . .	※ The contents of Alarm-2, 3 are the same as Alarm-1.

※ Alarm Type and Display

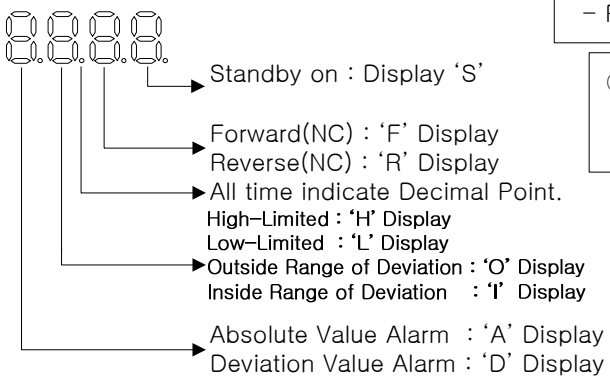

◎ Output
- Forward : 'ON' in Alarm occur, otherwise 'OFF'.
- Reverse : 'Off' in Alarm occur, otherwise 'ON'.

◎ Standby Condition
- When shifts Reset run to Program run.
- when change the type of Alarm.

(Table 5 : Type of Alarm)

No.	Alarm Type	Output Direct		Standby		Display Data
		For	Rev	On	Off	
1	Absolute-Value Upper-Limit Alarm	○		○		AH.F
2	Absolute-Value Lower-Limit Alarm	○		○		AL.F
3	Upper-Limit Alarm of Deviation	○		○		DH.F
4	Lower-Limit Alarm of Deviation	○		○		DL.F
5	Upper-Limit Alarm of Deviation		○	○		DH.R
6	Lower-Limit Alarm of Deviation		○	○		DL.R
7	Upper-and-Lower-Limit alarm of Deviation	○		○		DO.F
8	Upper-and-Lower-Limit Range of Deviation	○		○		DI.F
9	Absolute-Value Upper Limit Alarm		○	○		AH.R
10	Absolute-Value Upper Limit Alarm		○	○		AL.R
11	Absolute-Value Upper-Limit Alarm with Standby	○			○	AH.FS
12	Absolute-Value Lower-Limit Alarm with Standby	○			○	AL.FS
13	Upper-Limit Alarm of Deviation with Standby	○			○	DH.FS
14	Lower-Limit Alarm of Deviation with Standby	○			○	DL.FS
15	Lower-Limit Alarm of Deviation with Standby		○		○	DH.RS
16	Upper-Limit Alarm of Deviation with Standby		○		○	DL.RS
17	Upper-and-Lower-Limit Alarm of Deviation with Standby	○			○	DO.FS
18	Upper-and-Lower-Limit Range Alarm of Deviation with Standby	○			○	DI.FS
19	Absolute-Value Upper-Limit Alarm with Standby		○		○	AH.RS
20	Absolute-Value Lower-Limit Alarm with Standby		○		○	AL.RS

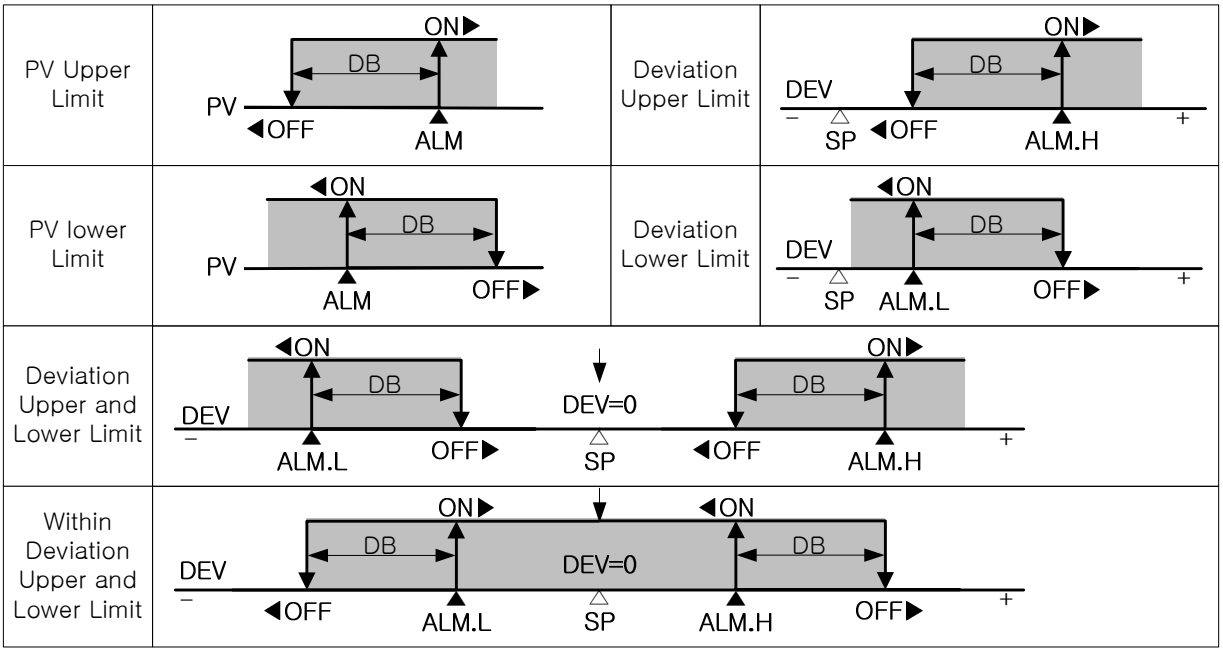

(Fig 11 : Alarm Operation)

Sym	Parameter	Setting Range	Unit	Initial	Remark
ALT1	Alarm Type 1	Refer to (Table 3 : Type of Alarm)	ABS	AH.F	All time indicate
AL-1	Set value of ALT1	EU(-100.0～100.0%)	EU	EU(100.0%)	Not deviation alarm
AL1.H	Upper-Limit of set value ALT1	EUS(-100.0～100.0%)	EUS	EUS(0.0%)	Deviation alarm
AL1.L	Lower-Limit of set value ALT1	EUS(-100.0～100.0%)	EUS	EUS(0.0%)	Deviation alarm
A1DB	Alarm Type1 DB	EUS(0.0～100.0%)	EUS	EUS(0.5%)	All time indicate
A1DY	Delay Time of Alarm 1	0.00～99.59 (MM:SS)	MM.SS	0.00	All time indicate
ALT2	Alarm Type 2	Refer to (Table 3 : Type of Alarm)	ABS	AH.F	All time indicate
AL-2	Set value of ALT2	EU(-100.0～100.0%)	EU	EU(100.0%)	Not deviation alarm
AL2.H	Upper-Limit of set value ALT2	EUS(-100.0～100.0%)	EUS	EUS(0.0%)	Deviation alarm
AL2.L	Lower-Limit of set value ALT2	EUS(-100.0～100.0%)	EUS	EUS(0.0%)	Deviation alarm
A2DB	Alarm Type2 DB	EUS(0.0～100.0%)	EUS	EUS(0.5%)	All time indicate
A2DY	Delay Time of Alarm 2	0.00～99.59 (MM:SS)	MM.SS	0.00	All time indicate
ALT3	Alarm Type 3	Refer to (Table 3 : Type of Alarm)	ABS	AH.F	All time indicate
AL-3	Set value of ALT3	EU(-100.0～100.0%)	EU	EU(100.0%)	Not deviation alarm
AL3.H	Upper-Limit of set value ALT3	EUS(-100.0～100.0%)	EUS	EUS(0.0%)	Deviation alarm
AL3.L	Lower-Limit of set value ALT3	EUS(-100.0～100.0%)	EUS	EUS(0.0%)	Deviation alarm
A3DB	Alarm Type3 DB	EUS(0.0～100.0%)	EUS	EUS(0.5%)	All time indicate
A3DY	Delay Time of Alarm 3	0.00～99.59 (MM:SS)	MM.SS	0.00	All time indicate

5.10 Retransmission Group(G.RET)

PV G.rEt	Press SET/ENT Key to select Retransmission Group after press ▲ or ▼ Key in Menu display. G.AT ↔ G.PID ↔ PWD ↔ G.CTL ↔ G.IS ↔ G.DO ↕ G.COM ↔ G.RET ↔ G.ALM ↔ G.OUT ↔ G.IN
PV rEt	The parameter to set the type of retransmission. There are 'LPS', 'PV','SP','MV' in the type of retransmission. Its initial setting is 'PV'. (LPS : Sensor Supply Power, 18V)
PV rEtH PV rEtL	The parameter to set High and low limits for a Retransmission output. When Retransmission output is specified to 'PV' or 'SP', the output range is scaled according to the RETH and RETL setting. (High Limit : 20mA output scale, Low Limit : 0 or 4mA output scale) ※ if Retransmission output is specified to 'MV',it is not display of RETH and RETL parameter and it displays RETH = 100.0%, RETL = 0.0% fixed.

※ In Case the Type of Retransmission is 'PV' or 'SP'.

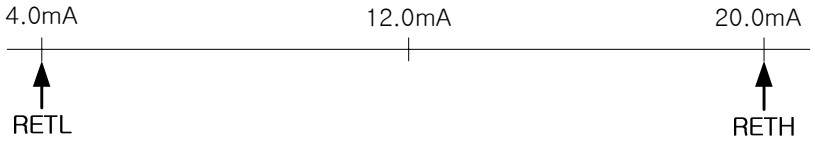

※ In Case the Type of Retransmission is 'MV'

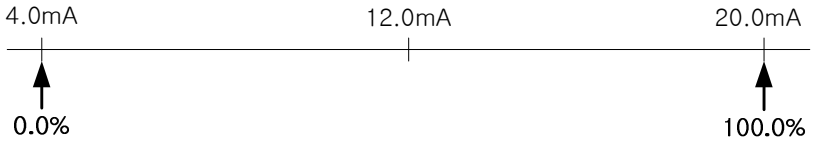

Sym	Parameter	Setting Range	Unit	Initial	Remark
RET	Select RET	LPS, PV, SP, MV	ABS	PV	All time indicate
RETH	High-Limited Value of Retransmission	T/C, RTD : INRH ~ INRL mV, V : INSH ~ INSL However, RETH > RETL	EU	INRH	When select RET= 'PV', 'SP'
RETL	Low-Limited Value of Retransmission		EU	INRL	

5.11 Communication Group(G.COM)

PV G.Con	Press SET/ENT Key to select Communication Group after press ▲ or ▼ Key in Menu display. G.AT ▲▼↔ G.PID ▲▼↔ PWD ▲▼↔ G.CTL ▲▼↔ G.IS ▲▼↔ G.DO ▼ ↑ ↕▲▼ *G.COM* ▲▼↔ G.RET ▲▼↔ G.ALM ▲▼↔ G.OUT ▲▼↔ G.IN
PV Con.P	The parameter to set communication Protocol.
PV bAUd	The parameter to set communication speed (BAUD RATE). The setting range of BAUD RATE is 600 ~ 19200 bys. Its initial setting is '9600'bps.
PV Prty	The parameter to set Communication Parity. The setting range are 'None','Even','ODD'. Its initial setting is 'None'.
PV Sbit	The parameter to set Communication Stop Bit. The setting range is '1' or '2'. Its initial setting is '1'.
PV dLEn	The parameter to set Communication Data Length. The setting range is '7' or '8'. Its initial setting is '8'. Parameter 'DLEN' is not display when 'COM.P' sets 'MODBUS ASCII' or 'RTU'.
PV Addr	The parameter to set Communication Address for controller. The setting range is 1 ~ 99 Pcs Address. its initial setting is '1'.
PV rP.tn	The parameter to set Communication Response Time. The RP.TM is a Waiting Time to return upper device after processing received commands when controller received it from upper device. The setting of RP.TM is setting by 10 msec times. In case of RP.TM = 0, If the processing of commands is over, it returns response to upper device.

Sym	Parameter	Setting Range	Unit	Initial	Remark
COM.P	Communication Protocol	PCC0, PCC1, MODBUS ASCII, MODBUS RTU, SYNC-Master	ABS	PCC0	Option
BAUD	Baud Rate	600, 1200, 2400, 4800, 9600, 19200	ABS	9600	Option
PRTY	Parity	None, Even, Odd	ABS	None	Option
SBIT	Stop Bit	1, 2	ABS	1	Option
DLEN	Data Length	7, 8(SKIP when MODBUS)	ABS	8	Option
ADDR	Address	1 ~ 99(Max 31 can connect)	ABS	1	Option
RP.TM	Response Time	0 ~ 10(×10ms)	ABS	0	Option

6. Display Error and Correction

Display ERROR	ERROR Contents	Correction
E.SYS	EEPROM, DATA Loss	Ask repair
E.RJC	RJC SENSOR Failure	Ask repair
Flash Decimal point of SP	Communication Failure	Comm Cable CHECK
S.OPN	SENSOR Open	SENSOR CHECK
E.AT	AT Time Out (24h over)	PROCESS CHECK

7. Installation

7.1 Dimension and Panel Cutout

SP590

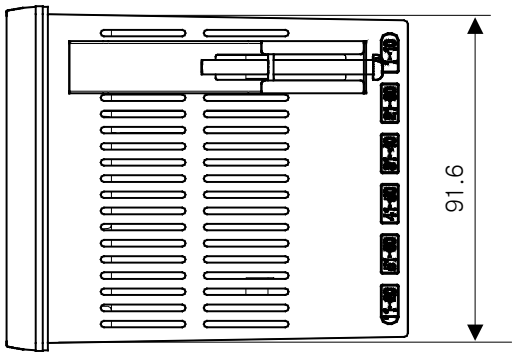

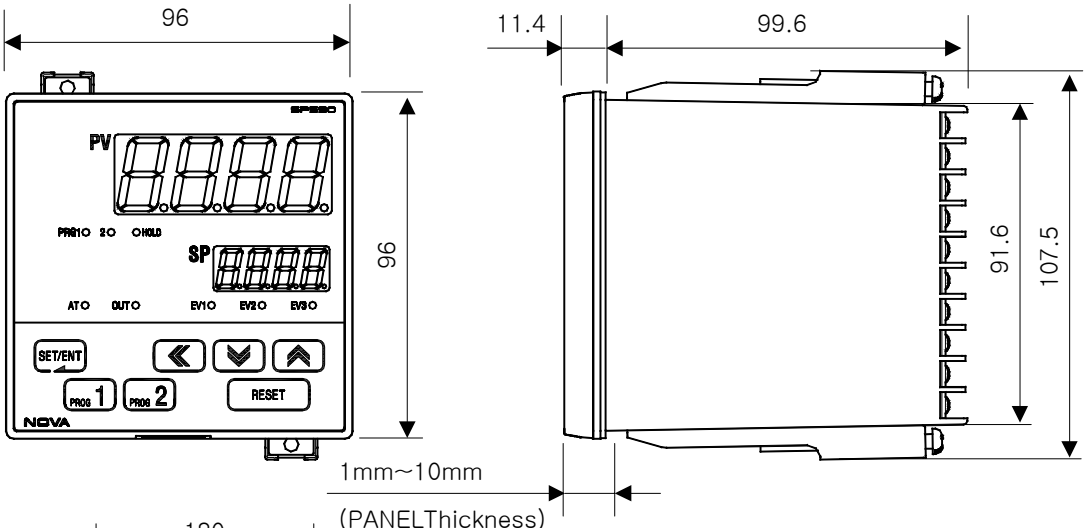

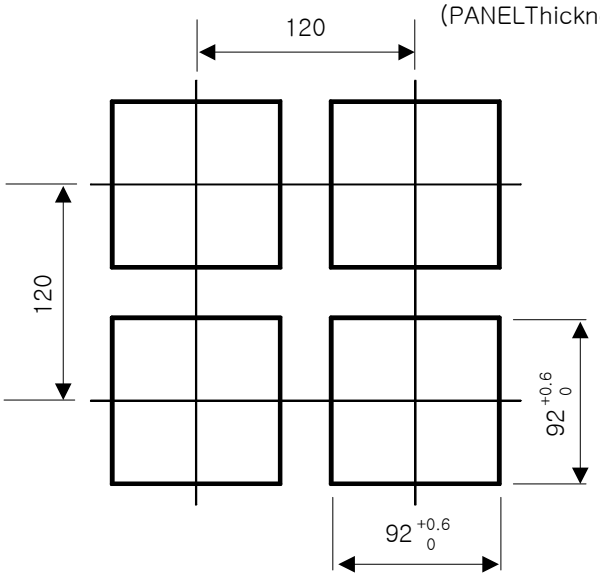

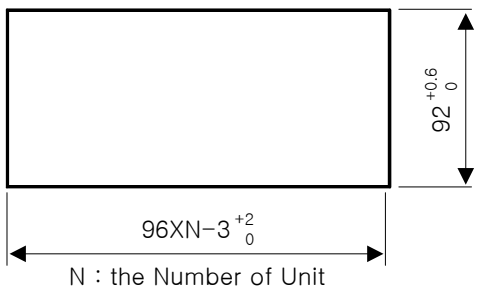

N : the Number of Unit

* In case of installing multiple units.

SP580

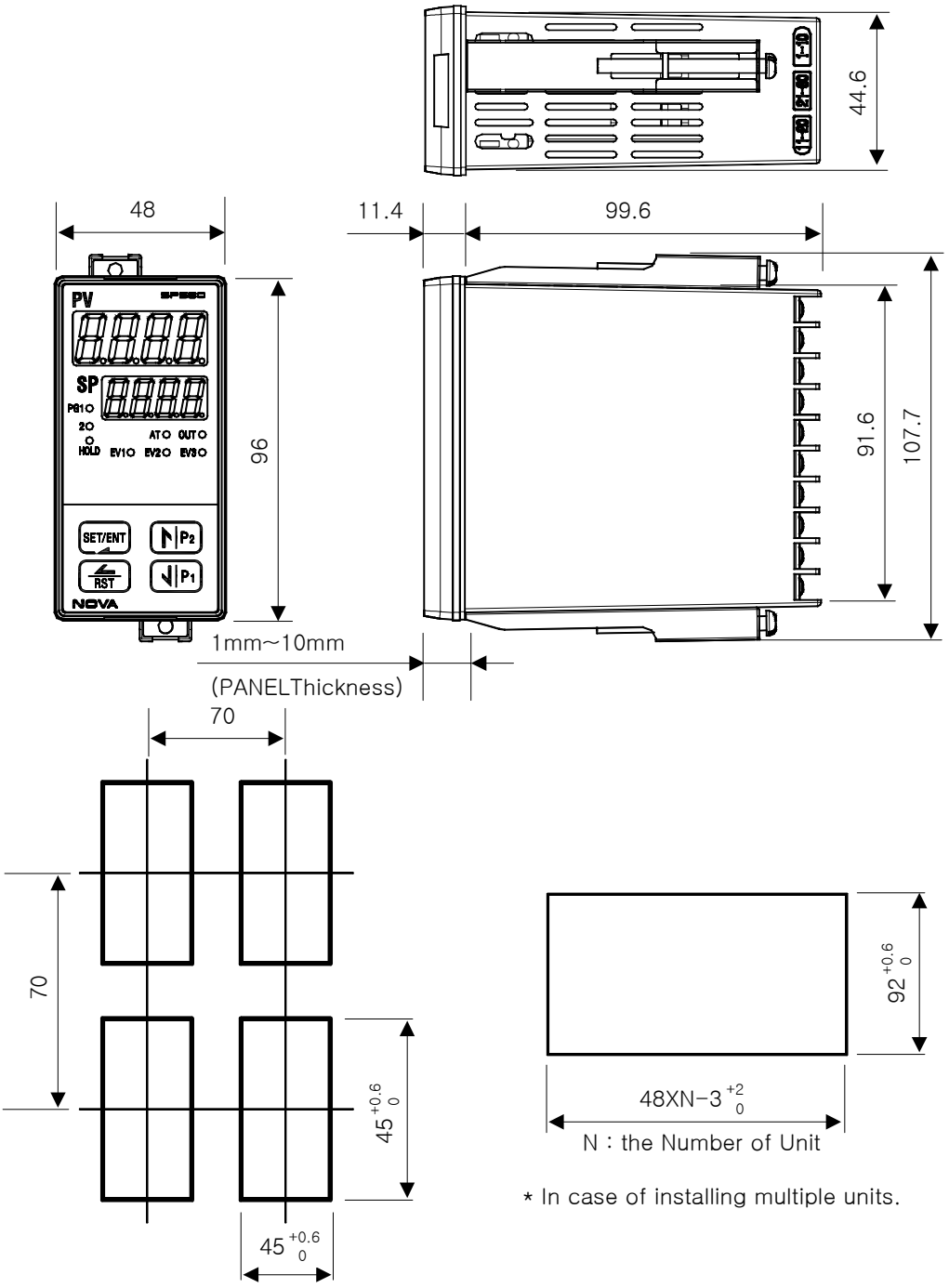
44.6
48
11.4
99.6
PV
SP
SET/ENT
RST
NOVA
96
91.6
107.7
1mm~10mm
(PANELThickness)
70
70
45 +0.6 0
45 +0.6 0
92 +0.6 0
48XN-3 +2 0
N : the Number of Unit
* In case of installing multiple units.

SP570

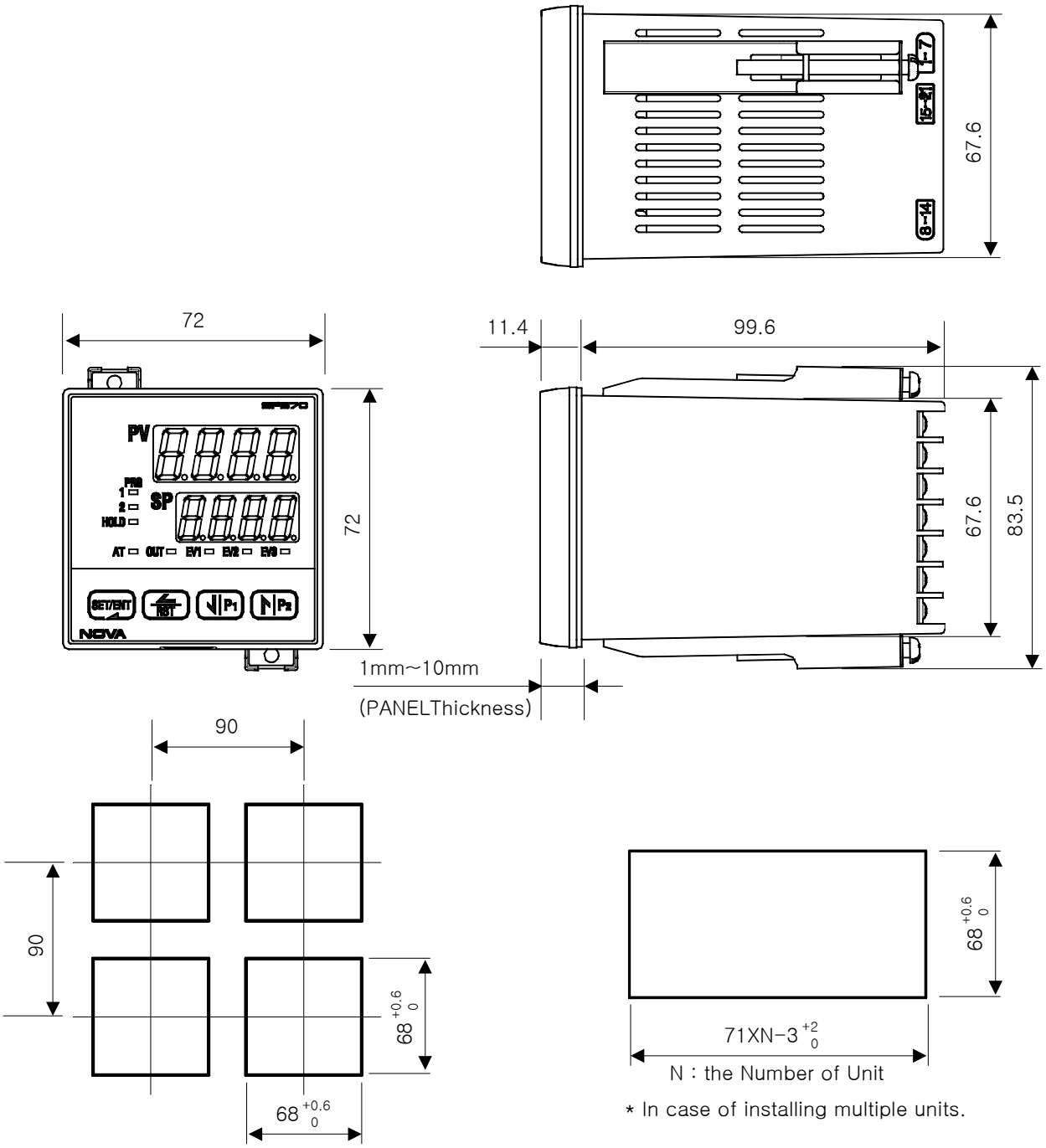
67.6
72
72
PV
SP
HOLD
AT
OUT
EV1
EV2
EV3
SET/ENT
NOVA
11.4
99.6
67.6
83.5
1mm~10mm
(PANELThickness)
90
90
68 +0.6 0
68 +0.6 0
71XN-3 +2 0
N : the Number of Unit
* In case of installing multiple units.

SP540

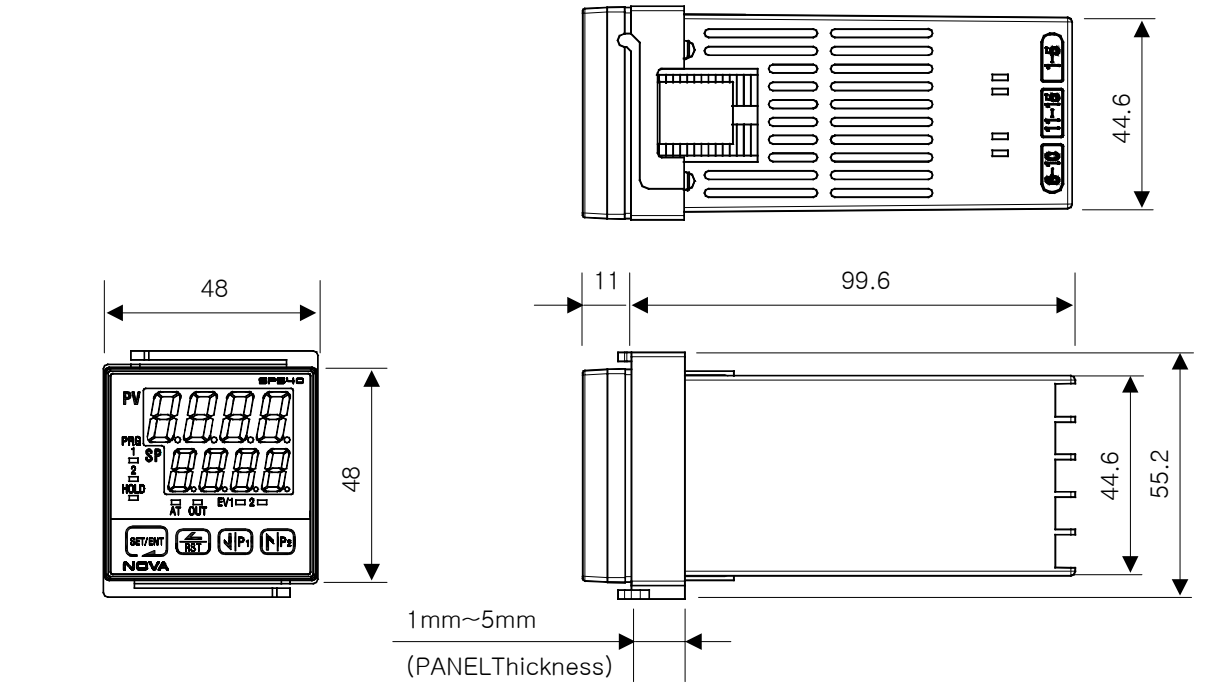

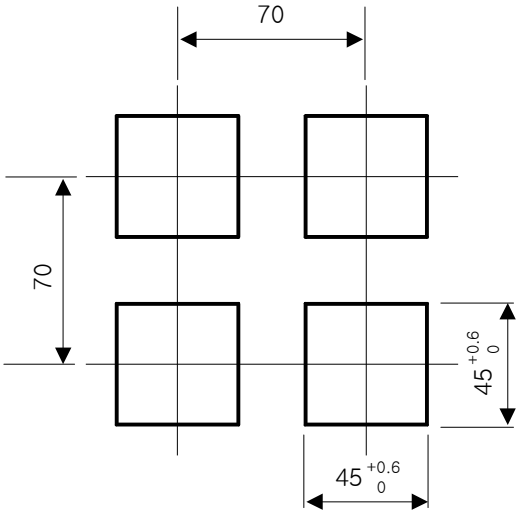

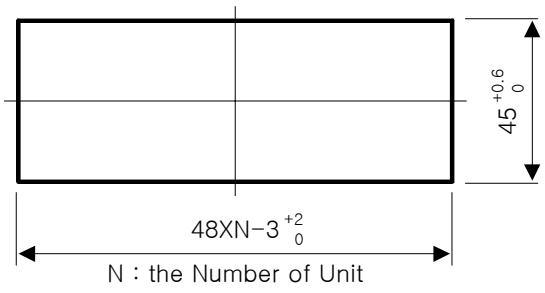

* In case of installing multiple units.

7.2 How to install Mount

SP590 SP570

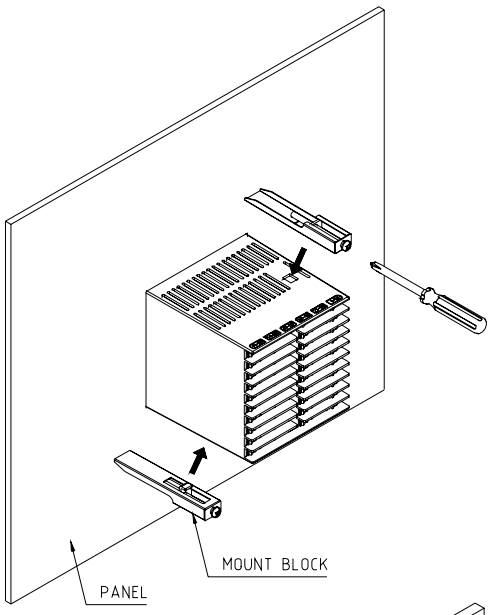

SP580

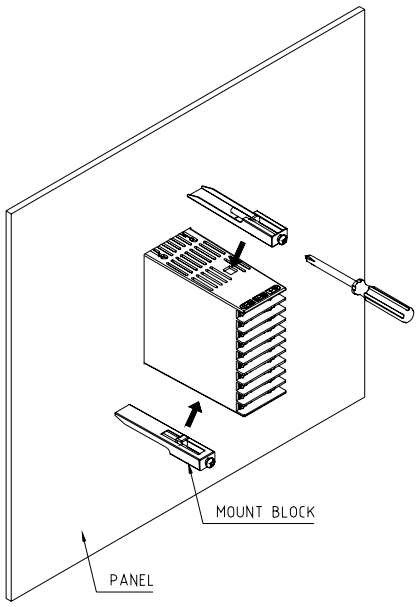

SP540

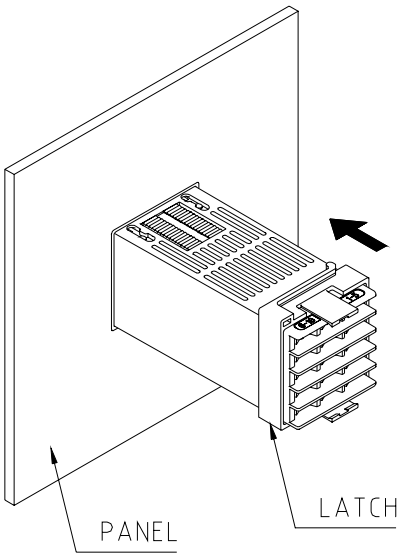

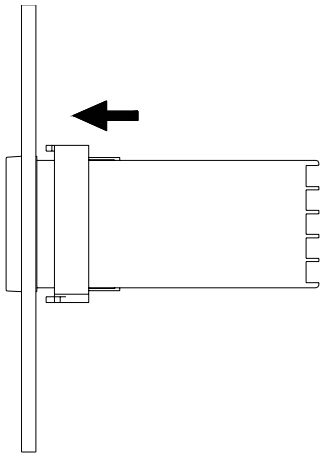

1) Cut the mounting panel. (Refer to 7.1 Dimension and Panel Cutout)
2) Insert the controller into the panel cutout with the rear terminal board facing ahead.
3) Attach the right and left mount and fix it to the panel.(Use driver)

CAUTION

Do not excessively tighten the clamp screws, protecting the controller housing and mount against being damaged.

7.3 Power Cable Specification

Vinyl insulated wire 0.9~2.0㎟ (Allowed Rating Voltage 300V max)

7.4 Terminal Specification

Use M3.5 screw-compatible crimp-on terminals with insulating sleeve as shown below.

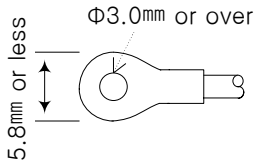

CAUTION

First Turn off the source circuit breaker, check to ensure that the power cable is not conducting electricity using a tester, and then proceed with wiring in the manner.

- Never touch the terminal in the rear panel to prevent electric shock when power is supplied to the controller.
- Be sure to turn off the electric power before wiring.

CAUTION

Bind the wires connected to the controller terminals neatly together in order to prevent electromagnetic wave radiation.

7.5 Terminal Arrangement and External wiring

SP590

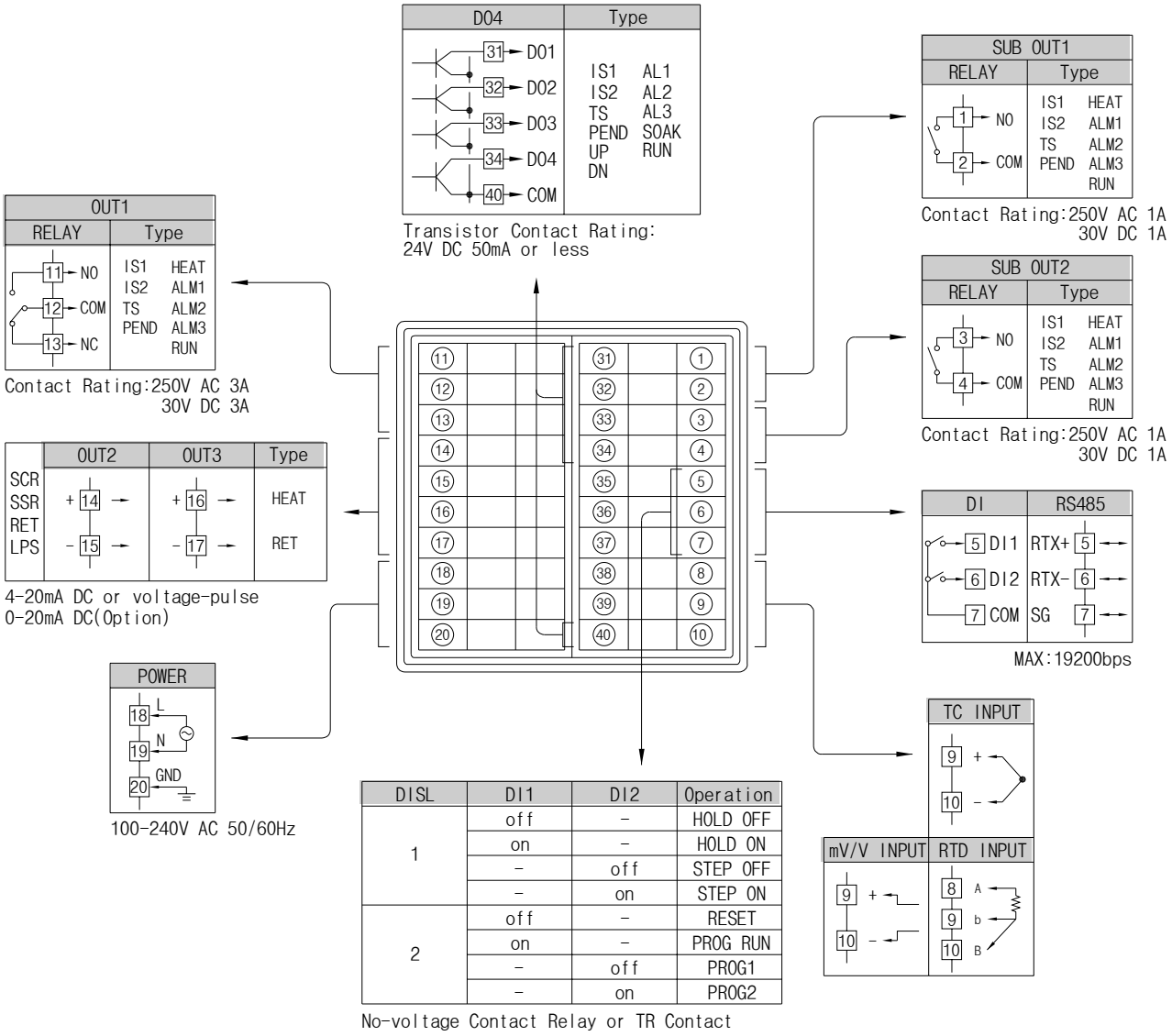

DISL	DI1	DI2	Operation
1	off	-	HOLD OFF
	on	-	HOLD ON
	-	off	STEP OFF
	-	on	STEP ON
2	off	-	RESET
	on	-	PROG RUN
	-	off	PROG1
	-	on	PROG2

No-voltage Contact Relay or TR Contact

SP580

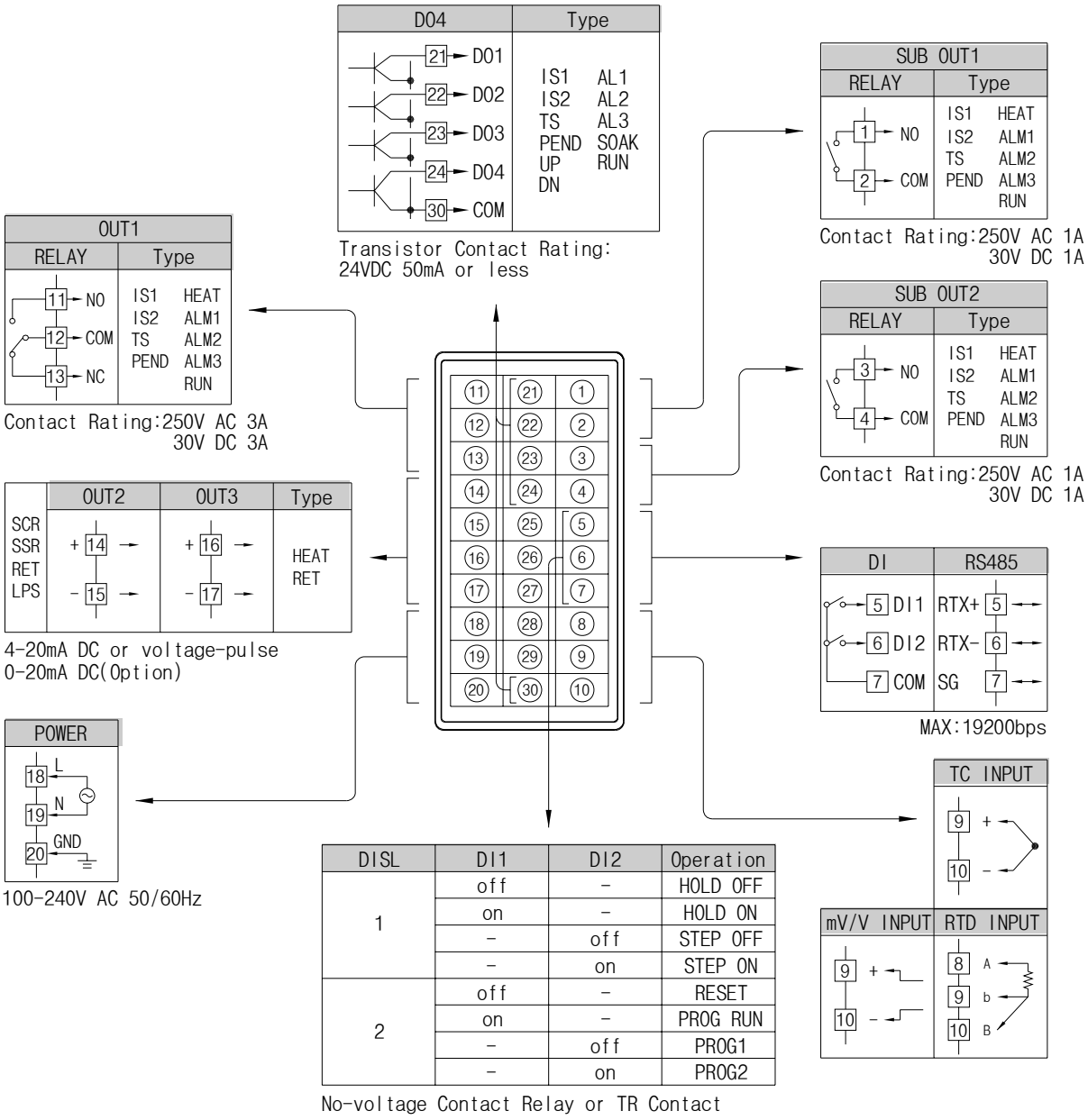

DISL	DI1	DI2	Operation
1	off	-	HOLD OFF
	on	-	HOLD ON
	-	off	STEP OFF
	-	on	STEP ON
2	off	-	RESET
	on	-	PROG RUN
	-	off	PROG1
	-	on	PROG2

No-voltage Contact Relay or TR Contact

SP570

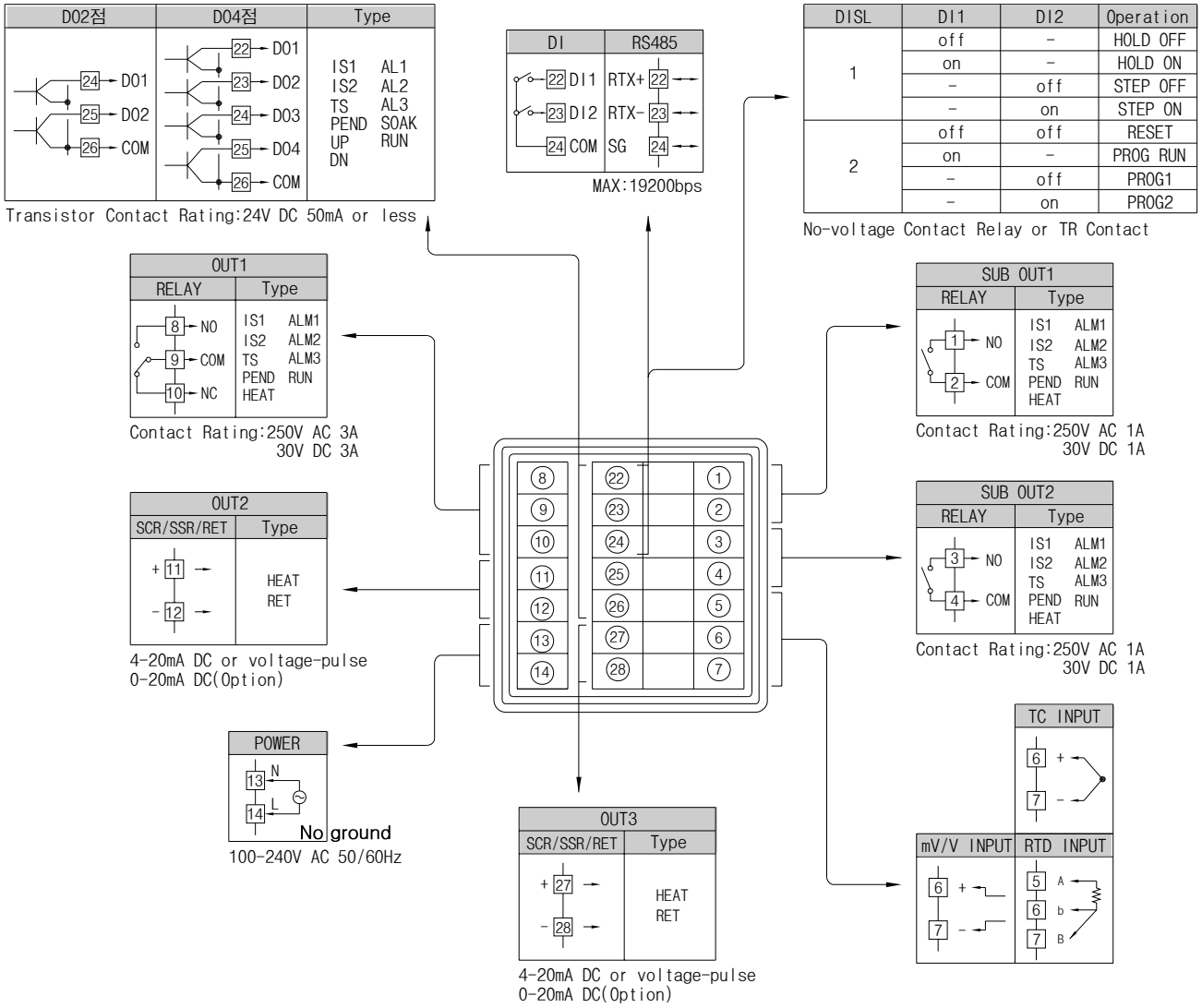
D02점
D04점
Type
24 DO1
25 DO2
26 COM
22 DO1
23 DO2
24 DO3
25 DO4
26 COM
IS1 AL1
IS2 AL2
TS AL3
PEND SOAK
UP RUN
DN
Transistor Contact Rating:24V DC 50mA or less
DI
RS485
22 DI1
23 DI2
24 COM
RTX+ 22
RTX- 23
SG 24
MAX:19200bps
DISL
DI1
DI2
Operation
1
off - HOLD OFF
on - HOLD ON
- off STEP OFF
- on STEP ON
2
off off RESET
on - PROG RUN
- off PROG1
- on PROG2
No-voltage Contact Relay or TR Contact
OUT1
RELAY
Type
8 NO
9 COM
10 NC
IS1 ALM1
IS2 ALM2
TS ALM3
PEND RUN
HEAT
Contact Rating:250V AC 3A
30V DC 3A
SUB OUT1
RELAY
Type
1 NO
2 COM
IS1 ALM1
IS2 ALM2
TS ALM3
PEND RUN
HEAT
Contact Rating:250V AC 1A
30V DC 1A
OUT2
SCR/SSR/RET
Type
+ 11
- 12
HEAT
RET
4-20mA DC or voltage-pulse
0-20mA DC(Option)
SUB OUT2
RELAY
Type
3 NO
4 COM
IS1 ALM1
IS2 ALM2
TS ALM3
PEND RUN
HEAT
Contact Rating:250V AC 1A
30V DC 1A
POWER
13 N
14 L
No ground
100-240V AC 50/60Hz
TC INPUT
6 +
7 -
OUT3
SCR/SSR/RET
Type
+ 27
- 28
HEAT
RET
4-20mA DC or voltage-pulse
0-20mA DC(Option)
mV/V INPUT
RTD INPUT
6 +
7 -
5 A
6 b
7 B

SP540

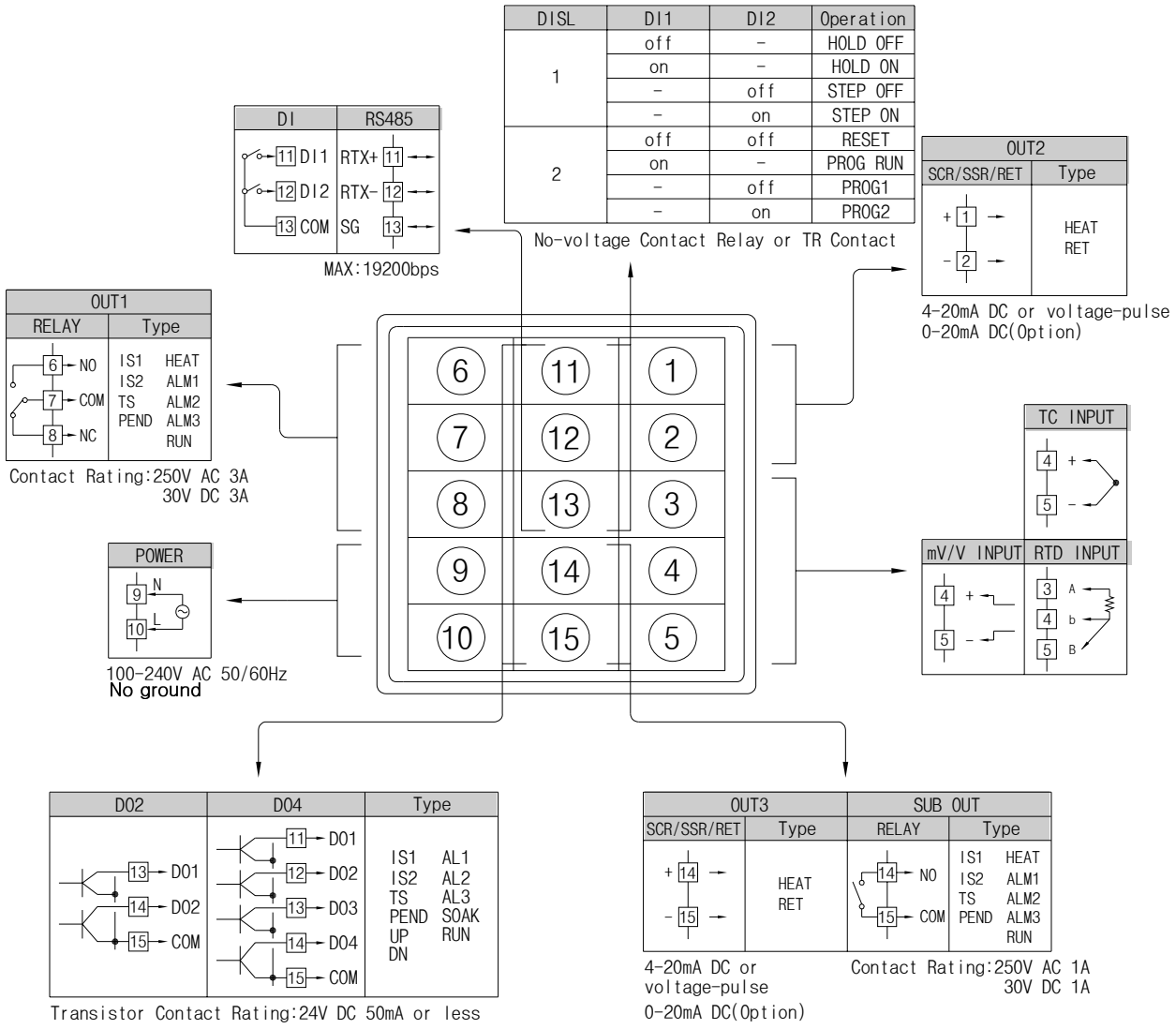
DISL
DI1
DI2
Operation
1
off
-
HOLD OFF
on
-
HOLD ON
-
off
STEP OFF
-
on
STEP ON
2
off
off
RESET
on
-
PROG RUN
-
off
PROG1
-
on
PROG2
No-voltage Contact Relay or TR Contact
DI
RS485
11 DI1
12 DI2
13 COM
RTX+ 11
RTX- 12
SG 13
MAX:19200bps
OUT2
SCR/SSR/RET
Type
+ 1
- 2
HEAT
RET
4-20mA DC or voltage-pulse
0-20mA DC(Option)
OUT1
RELAY
Type
6 NO
7 COM
8 NC
IS1 HEAT
IS2 ALM1
TS ALM2
PEND ALM3
RUN
Contact Rating:250V AC 3A
30V DC 3A
TC INPUT
4 +
5 -
mV/V INPUT
RTD INPUT
4 +
5 -
3 A
4 b
5 B
POWER
9 N
10 L
100-240V AC 50/60Hz
No ground
6 11 1
7 12 2
8 13 3
9 14 4
10 15 5
DO2
DO4
Type
13 DO1
14 DO2
15 COM
11 DO1
12 DO2
13 DO3
14 DO4
15 COM
IS1 AL1
IS2 AL2
TS AL3
PEND SOAK
UP RUN
DN
Transistor Contact Rating:24V DC 50mA or less
OUT3
SCR/SSR/RET
Type
+ 14
- 15
HEAT
RET
4-20mA DC or
voltage-pulse
0-20mA DC(Option)
SUB OUT
RELAY
Type
14 NO
15 COM
IS1 HEAT
IS2 ALM1
TS ALM2
PEND ALM3
RUN
Contact Rating:250V AC 1A
30V DC 1A

7.6 Grounding and Power Cable Connection.

■ Use a thick grounding cable (2 ㎟ or thicker and shorter than 20m) for class-3 grounding or higher (grounding resistance : 100 Ω below)
■ Be sure to ground from the grounding terminal to an independent grounding point(1 point grounding)
■ Use Vinyl insulation wire 0.9~2.0㎟ (Allowed Rating Voltage 300V max) or higher leveled cable for power cable connection.

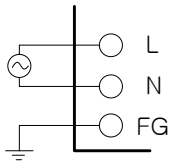

CAUTION

Be sure to ground FRAME GROUND (FG).
Be sure to keep L(Hot) and N(neutral) status connection.
Otherwise, it may result for operation default and defect.

CAUTION

To prevent electric shock, be sure to turn off the controller and the source circuit breaker before wiring.

CAUTION

■ Be sure to connect to correct polarities, Connecting to a wrong polarity may cause unexpected malfunction.
■ Use shielded wires and ground the shielding to an independent grounding point.
■ Keep the input circuit wiring as far as possible away from the power and ground circuit.
■ Use a wire having a low conductor resistance and no three-wire resistance differential.

7.7 ANALOG INPUT Connection.

(1) RTD Input.

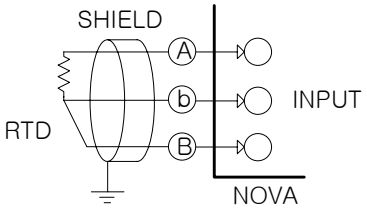

(2) DC VOLTAGE Input.

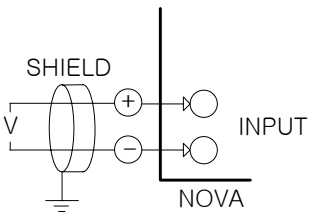

(3) DC CURRENT Input.

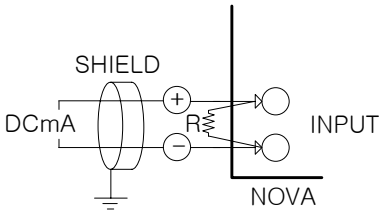

7-8. ANALOG OUTPUT Connection.

CAUTION

To prevent electric shock, be sure to turn off the Nova Controller and the source circuit breaker before wiring.

CAUTION

■ Be sure to connect to correct polarities. Connecting to a wrong polarity may cause serious trouble.
■ Use shielded wires for the wiring and, Be sure to connect independently(1 point grounding)

(1) Voltage Pulse Output(SSR)/Current Output(SCR)

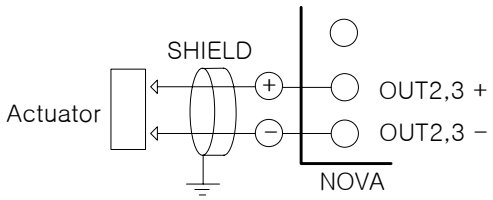

SCR : 4～20mA DC, 600 ohm max
SSR : 12V DC min, 600 ohm min

CAUTION

To prevent electric shock, be sure to turn off the Nova controller and the source circuit breaker before connection/disconnection of the actuator as well as wiring.

(2) Retransmission Output(RET)

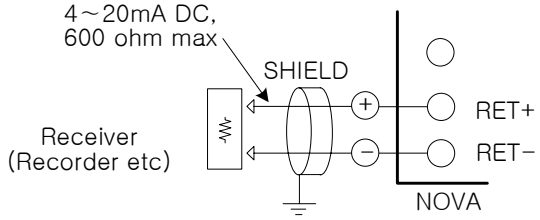

CAUTION

To prevent electric shock, be sure to turn off the Nova controller and the source circuit breaker before connection/disconnection of the receiver as well as wiring.

(3) Loop Power Supply(LPS)

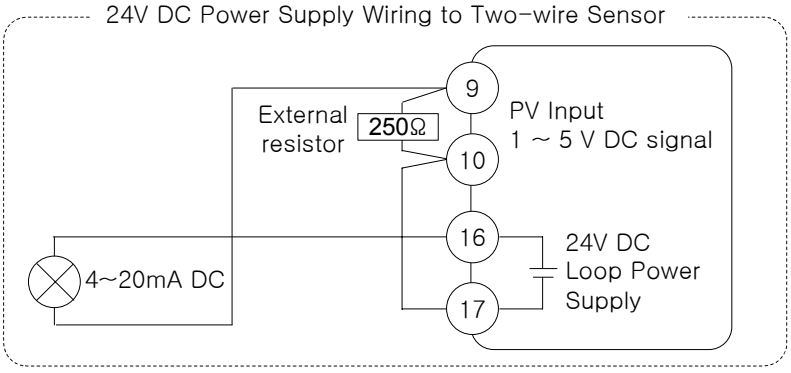

TYP 24±0.5V 30mA
MAX 22±0.5V 0.85W

7.9 External Contact Output Connection.(RELAY)

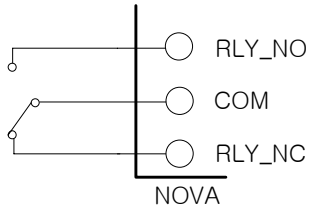

CAUTION

To protect electric shock, be sure to turn off the Nova controller and the source circuit breaker
before wiring

7.10 External Contact Input Connection(DI)

- Use a no-voltage contact such as relay contact.
- It has an ample switching capacity for the terminal's OFF voltage (approx. 5V) and On current (approx. 1mA)
- When using Open Collector(TR), use one with 2V or lower voltage when the contact is ON and 100㎂ or less leakage current when it is OFF.

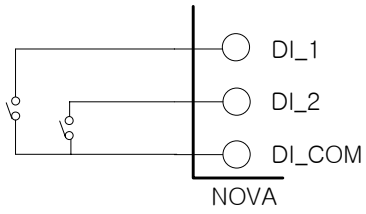

▲ RELAY Contact Connection

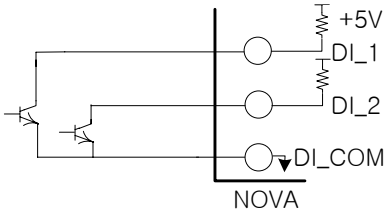

▲ TRANSISTOR Contact Connection

CAUTION

To prevent electric shock, be sure to turn off the Nova controller and the source circuit breaker before wiring

7.11 Use an Auxiliary Relay.

- When using an auxiliary relay or inductance load (L) such as solenoid, be sure to insert a CR filter (for AC) or diode (for DC) in parallel as a surge-suppressor circuit to reject sparks, preventing malfunction or damage.
  Recommended CR filters are as follows.
- Recommended CR FILTER

▶ Seong Hoo Electronics : BSE104R120 25V (0.1μ+120Ω)
▶ HANA PARTS CO. : HN2EAC
▶ Songmi Eolectic co.,Ltd : CR UNIT 953, 955 etc
▶ Jiwol Electric Co.,Ltd : SKV, SKVB etc
▶ Shinyoug Communications Co.,Ltd : CR-CFS, CR-U etc

CAUTION

If inductance load is over as per the controller specifications, it is needed to set frequent On/Off relay operations.

(1) In case of DC RELAY

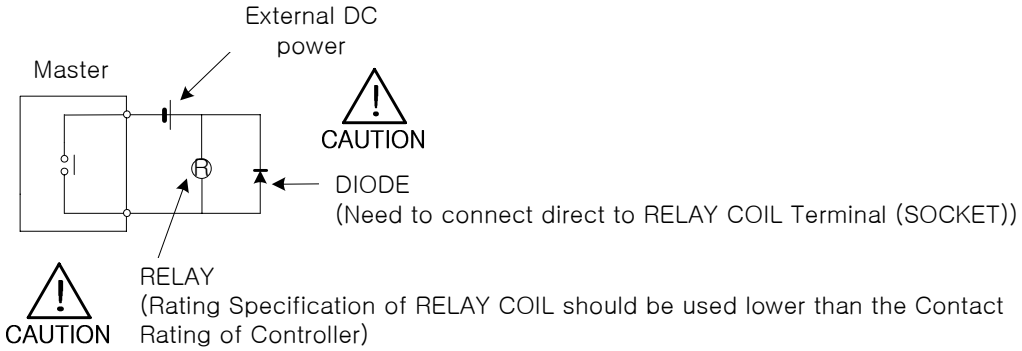

(2) In case of AC RELAY

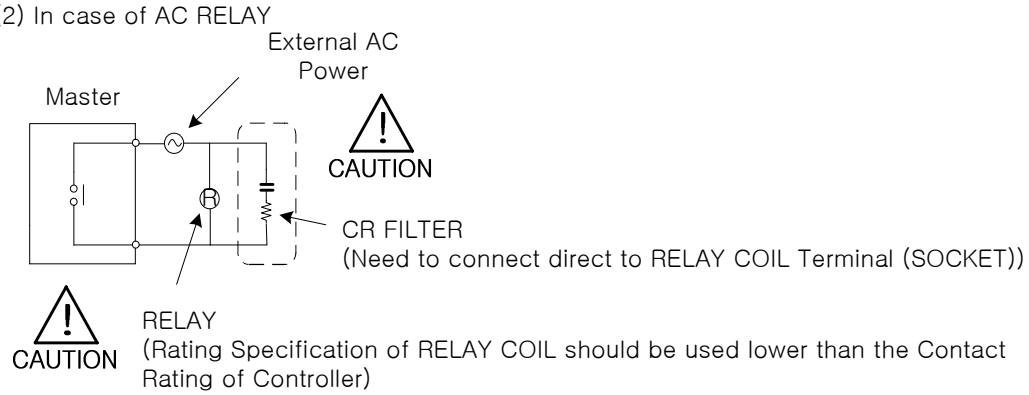

7.12 Communication Wiring (RS485)

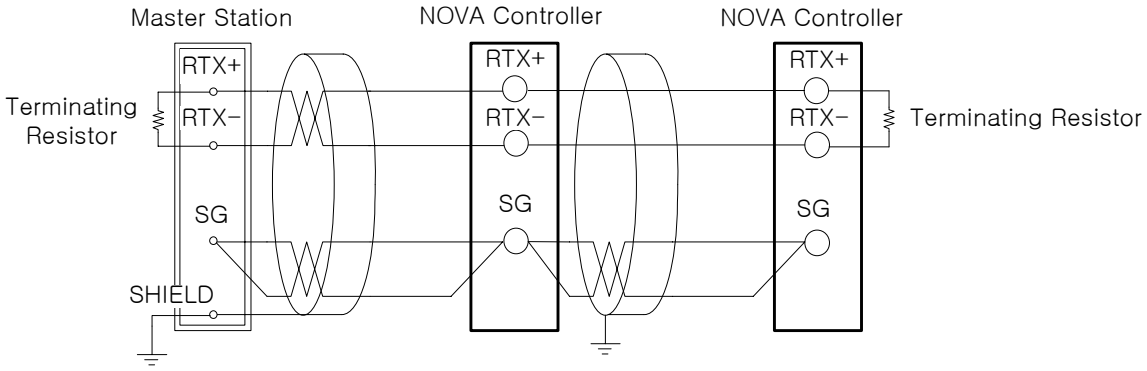

■ Up to 31 slave controllers(Nova series instruments equipped with communication option) can be multidrop-connected.
■ Be sure to connect terminating resistors(220Ω, 1/4W) to slave and master controllers at communication-channel ends as shown above.

CAUTION

To prevent electric shock, be sure to turn off the NOVA controller and source circuit breaker before wiring.

* D-Register

NO.	PROCESS	FUNCTION	SET POINT	SIGNAL	ALARM	PID	IN/OUT
	0	100	200	300	400	500	600
0							
1	NPV			1.IST	ALT1	ARW	IN-T
2	NSP			1.ISB	ALT2	FUZZY	INT-U
3	TSP			1.ISH	ALT3	C.MOD	IN.RH
4				1.ISL			IN.RL
5			HOLD SP	1.ISD			IN.DP
6	MVOUT		HOLD TIME	2.IST	AL-1		IN.SH
7				2.ISB	AL-2		IN.SL
8				2.ISH	AL-3		IN.FL
9	PIDNO			2.ISL			BSL
10	NOWSTS			2.ISD			RSL
11		F.KEY,RST/P1/P2		DO1	A1DB	1.P	BSP1
12		HOLD,OFF/ON		DO2	A2DB	1.I	BSP2
13		STEP,OFF/ON		DO3	A3DB	1.D	BSP3
14	ALSTS			DO4		1.MR	D.FL
15							BS0
16					A1DY		BS1
17	SIGNAL.STS				A2DY		BS2
18					A3DY		BS3
19	ERROR					RP1	BS4
20							
21		AT			AL1.H	2.P	OUT1
22		AT-G			AL2.H	2.I	OUT2
23					AL3.H	2.D	OUT3
24						2.MR	
25	PTNO						SUB1
26	SEG.NO				AL1.L		SUB2
27	END.SEG.NO				AL2.L		
28	RUN.TIME				AL3.L		
29	SET.TIME					RP2	
30							
31	LINK.CODE					3.P	HEAT2
32	RPT					3.I	
33	RST	PE-TM				3.D	HEAT3
34	REN					3.MR	
35		US1					
36	WAIT.TIME	US2					
37		LOCK					O.ACT
38		DI.SL					CT
39		DSP.H				RHY	
40		DSP.L					
41						4.P	OH
42						4.I	OL
43						4.D	

NO.	PROCESS	FUNCTION	SET POINT	SIGNAL	ALARM	PID	IN/OUT
	0	100	200	300	400	500	600
44						4.MR	
45							
46							PO
47							
48							
49						RDV	
50							
51							RET
52							RETH
53	U						RETL
54	s						
55	e						
56	r						
57							
58	A						
59	r						
60	e						
61	a						COM.P
62							BAUD
63							PRTY
64							SBIT
65							DLEN
66							ADDR
67							RP.TM
68							
69							
70							
71							
72							
73							
74							
75							
76							
77							
78							
79							
80							
81							
82							
83							
84							
85							
86							
87							

NO.	PROCESS	FUNCTION	SET POINT	SIGNAL	ALARM	PID	IN/OUT
	0	100	200	300	400	500	600
88							
89							
90							
91							
92							
93							
94							
95							
96							
97							
98							
99							

(※ Thick line : Read Only)

NO.	RESERVED	RESERVED	RESERVED	PT INFO	PT1	PT2	RESERVED
	700	800	900	1000	1100	1200	1300
0							
1				TMU	1.LC	2.LC	
2				STC	1.SSP	2.SSP	
3				WZ			
4				WTM	1.SP1	2.SP1	
5					1.TM1	2.TM1	
6					1.TS1	2.TS1	
7					1.SP2	2.SP2	
8					1.TM2	2.TM2	
9					1.TS2	2.TS2	
10					1.SP3	2.SP3	
11					1.TM3	2.TM3	
12					1.TS3	2.TS3	
13					1.SP4	2.SP4	
14					1.TM4	2.TM4	
15					1.TS4	2.TS4	
16					1.SP5	2.SP5	
17					1.TM5	2.TM5	
18					1.TS5	2.TS5	
19					1.SP6	2.SP6	
20					1.TM6	2.TM6	
21					1.TS6	2.TS6	
22					1.SP7	2.SP7	
23					1.TM7	2.TM7	
24					1.TS7	2.TS7	
25					1.SP8	2.SP8	
26					1.TM8	2.TM8	
27					1.TS8	2.TS8	

NO.	RESERVED	RESERVED	RESERVED	PT INFO	PT1	PT2	RESERVED
	700	800	900	1000	1100	1200	1300
28					1.SP9	2.SP9	
29					1.TM9	2.TM9	
30					1.TS9	2.TS9	
31					1.SPA	2.SPA	
32					1.TMA	2.TMA	
33					1.TSA	2.TSA	
34					1.SPB	2.SPB	
35					1.TMB	2.TMB	
36					1.TSB	2.TSB	
37					1.SPC	2.SPC	
38					1.TMC	2.TMC	
39					1.TSC	2.TSC	
40					1.SPD	2.SPD	
41					1.TMD	2.TMD	
42					1.TSD	2.TSD	
43					1.SPE	2.SPE	
44					1.TME	2.TME	
45					1.TSE	2.TSE	
46					1.SPF	2.SPF	
47					1.TMF	2.TMF	
48					1.TSF	2.TSF	
49							
50							
51					1.RPT	2.RPT	
52					1.RST	2.RST	
53					1.REN	2.REN	
54							
55							
56							
57							
58							
59							
60							
61							
62							
63							
64							
65							
66							
67							
68							
69							
70							
71							

NO.	RESERVED	RESERVED	RESERVED	PT INFO	PT1	PT2	RESERVED
	700	800	900	1000	1100	1200	1300
72							
73							
74							
75							
76							
77							
78							
79							
80							
81							
82							
83							
84							
85							
86							
87							
88							
89							
90							
91							
92							
93							
94							
95							
96							
97							
98							
99							

: Not use User Screen (D1100 ~ D1153, D1200 ~ D1253)

SAMWONTECH CO., LTD.

202-703, Buchon Techno-park,
Yakdae-dong, Wonmi-gu, Buchon,
Gyeonggi-do, Korea 420-733
TEL: +82-32-326-9120, 9121
FAX: +82-32-326-9119
http:// www.samwontech.com
E-mail: webmaster@samwontech.com

Further information contact Samwontech

The contents of this document are subject to change without prior notice.
All Rights Reserved. Copyright © 2003 Samwontech Co., Ltd.

Printed in Korea : June. 2003(A)